Public Building Commission

Tuesday, September 8, 2020
County City Building
Room 113 - The Bill Luxford Studio
1:30 p.m.

Location Announcement of Nebraska Open Meetings Act: A copy of the Nebraska Open Meetings Act is located on the wall at the rear of the room.

1. CALL TO ORDER

Public Building Commission Meeting

2. MINUTES

Approval of the previous Public Building Commission Meeting Minutes

Documents:

PBC Minutes Budget Hearing 8 11 20.Pdf
PBC Minutes 8 11 20.Pdf

3. OLD BUSINESS

A. Hall of Justice Front Security Entrance Update and Payment Application

Documents:

HOJ Pay App 11.Pdf

B. Security Update

4. NEW BUSINESS

A. Approval of General Vouchers for July 2020

Documents:

August 2020 Vouchers.pdf

B. Law Enforcement Memorial Presentation

Https://Honorthefallenlincoln.com

C. Health Department - Boiler Quote Approval

Documents:

Lancaster County Health Boiler Quote.pdf

5. CONTRACT APPROVALS:

A. Memo of Understanding for Janitorial Supplies and Equipment #MOU084 The Home Depot Pro

Documents:

MOU084 The Home Depot Pro.pdf

B. Contract for Carpet and Upholstery Cleaning #20-154 Supersteam

Documents:

20-154 Carpet Cleaning.pdf

C. Amendment to Contract for Workstations and Accessories 17-140 AOI

Documents:

17-140 AOI.pdf

D. Amendment to Contract for Workstations and Accessories #17-140 Office Interiors and Design, Inc.

Documents:

17-140 OID.pdf

E. Amendment to Contract for Office Seating #18-117 encompas

Documents:

18-117 Encompas.pdf

6. REPORT FROM ADMINISTRATIVE STAFF

Discussion of administrative items and confirmation of the next Public Building Commission Meeting on October 13, 2020.

7. ADJOURNMENT

MINUTES
PUBLIC BUILDING COMMISSION-BUDGET HEARING
TUESDAY, AUGUST 11, 2020, 1:30 P.M.
CITY COUNCIL CHAMBERS
COUNTY CITY BUILDING

PRESENT: Richard Meginnis, Roma Amundson, Chris Callihan, Sean Flowerday and Jane Raybould

OTHERS PRESENT: Kerin Peterson, Yohance Christie, Nick Hanna, Dan Mulligan, Brian Johnson, and Margaret Bohy

Chairperson Richard Meginnis gave an opening statement at the beginning of the Public Budget Hearing, held August 11, 2020 at 1:30 p.m. in City Council Chambers of the County City Building.

Good Afternoon Ladies and Gentlemen: A copy of the Open Meetings Act is available on the wall at the rear of this room. My name is Richard Meginnis; I am the current chairperson of the County/City Public Building Commission. Other Commission members are Roma Amundson, Vice Chairperson, County Commissioner; City Councilperson, Jane Raybould, County Commissioner, Sean Flowerday and Chris Callihan, representing the Public. Other staff introductions may be made as necessary to answer your inquiries or comments. This hearing is being held pursuant to public notice published on August 6, 2020, a copy of which is available should you require one.
The Lincoln Lancaster County Building Commission's budget for 2020/2021 consists of three components: (1) the operating budget, (2) capital improvements budget and (3) the tax levy budget. The operating budget not counting capital improvements or bond payments is $7,483,916.00, or a 1.9% increase over last year's budget. The increase reflects ongoing energy efficiency projects, increased costs due to COVID-19 and increased costs of materials and contracted services. There is a capital improvement portion of the budget this year which will consist of capital expenditures of $1,105,016.00 related to a variety of projects, many of which involve the Hall of Justice, the County/City Building and the Lincoln Lancaster County Health Department. Relating to the tax levy side of the budget, we are requesting an assessment of 1.7 cents per $100 levy which is projected to total $4,751,640.00 This amount is committed to bond payments for the master plan implementation, K Street Storage Facility, Court House Plaza, Health Department, 2nd and 3rd Floor Renovation Project, Parking Project bonds, and the renovation of the 605 Building and 825 J Building. The overall principal and interest payments for these bonds total $3,659,226.00 for this budget year. This is an overview of the total budget projected along with its revenue sources. The Building Commission staff are here to assist in answering any questions you may have. To discuss any part of the proposed budget, please step to the microphone and state your name and address for the record prior to your inquiry or comment. We would appreciate a limit of 5 minutes but will take such time as may be required to provide information. Please Begin.

Kerin Peterson spoke with comments regarding the 2020/2021 budget. She thanked the Commissioners for their acceptance of the new OpenGov format provided by Lancaster County. Kerin stated the capital improvements budget includes an operating deficit for 233 South 10th St., which is offset by revenue we receive from Park and Go for monthly parking permits and event parking proceeds of about $30,000.00 per year. Revenues reflect rental rates that have not increased as well as the security pass through charges and the parking surcharge. Both surcharges are calculated per square foot of office space. On the expenses side the "Other Charges" is payroll for security, maintenance, mailroom and cleaning staff. Also included in "Other Charges" are the contract fees which include architect and engineer fees for each project.

With no public comments Sean Flowerday motioned to approve the 2020-2021 budget. Jane Raybould seconded the motion. The motion passed and the budget was approved.

Roma Amundson moved to adjourn the Public Budget Hearing and Chris Callihan seconded the motion and the vote carried. The Public Budget Hearing was adjourned.

MINUTES
PUBLIC BUILDING COMMISSION
TUESDAY, AUGUST 11, 2020 1:30 P.M.
CITY COUNCIL CHAMBERS
COUNTY CITY BUILDING

PRESENT: Richard Meginnis, Roma Amundson, Chris Callihan, Sean Flowerday and Jane Raybould

OTHERS PRESENT: Kerin Peterson, Yohance Christie, Nick Hanna, Dan Mulligan, Brian Johnson and Margaret Bohy.

The meeting of the Public Building Commission was called to order by Richard Meginnis.

The meeting minutes from July 14, 2020 were presented for approval. Roma Amundson motioned for approval and Jane Raybould seconded. The vote carried.

County Assessor Remodel – The final payment application #7 for $11,709.00 was submitted by Kerin Peterson for approval. The project is completed and a tour will be provided at the conclusion of the meeting. Roma Amundson moved for approval and Sean Flowerday seconded the motion. The vote carried.

Hall of Justice Front Security Entrance Remodel – Nick Hanna, The Clark Enersen Partners submitted payment application #10 for $12,730.00 for approval. He updated that the entrance will be completed in the next three weeks. Electrical and mechanical should be done this week, drywall should be completed the following week and frames and glazing following. Chris Callihan motioned for approval and Jane Raybould seconded. The vote carried.

Security Update – No security update.

Roma Amundson motioned to approve the general vouchers for July 2020. Jane Raybould seconded the motion. The vote carried.

Sheriff's Office Investigations Area Remodel Bid Approval – Dan Mulligan presented the remodel project for the Sheriff's office. He stated they will refinish some of the mill work and just some small construction work is needed in three different rooms. The bid went out to UP vendors and Dickey Hinds Muir submitted the only bid for a total of $19,970. It is recommended to accept this bid as it is within the projected costs. Jane Raybould motioned to approve the bid and Sean Flowerday seconded. The vote carried.

Election of Officers – Sean Flowerday motioned to appoint Roma Amundson as Chairperson of the Public Building Commission. Jane Raybould seconded the motion. The vote carried. Sean Flowerday motioned to appoint Chris Callihan as the Vice-Chairperson of the Public Building Commission. Jane Raybould seconded the motion and the vote carried.

There were nine contract approvals submitted by Purchasing:

a. Memo of Understanding for Janitorial and Sanitation Supplies, Equipment and Related Services #MOU083 National Everything Wholesale;
b. Amendment to Memo of Understanding for Fleet Services Parts and Equipment #MOU046 OReilly Auto Parts;

c. Amendment to Memo of Understanding for Auto Truck Replacement Parts and Tires #MOU048 A Street Auto Parts Inc.;
d. Amendment to Contract for Window Cleaning Services #14-155 GM Window Services;
e. Amendment to Contract for Window Cleaning Services #14-155 Fish Window Company;
f. Amendment to Contract for Water Treatment Service Program #9120 Kurita America, Inc.;
g. Amendment to Contract for Equipment and Accessory Rental #14-137 Sunbelt Rentals;
h. Amendment to Contract for Equipment and Accessory Rental #14-137 NMC, Inc.;
i. Amendment to Contract for Equipment and Accessory Rental #14-137 Hamilton Equipment;

Roma Amundson motioned for approval of all contracts. Jane Raybould seconded. The vote carried.

The next meeting of the Public Building Commission will be September 8, 2020.

Report from Administrative Staff – Kerin gave an update about capital improvement projects that are currently in motion. The County Clerk's office has a remodel to incorporate more staff for the centralized payroll system. Most of that remodel is furniture based at their cost, but there is some small construction being done. The north public parking lot has joint sealant failure so there are specifications going out to bid to repair that soon. The Law Enforcement Memorial project that funding is being raised for will need some pad site design and work performed for that space, the design will be done this year and the actual work next budget year. The Health Department has some concrete issues in the parking lot and front entrance that will be addressed soon. Kerin was asked what else can be done to cut down on costs for the 233 Building, it was reported that all services not essential have been shut down. Roma asked for the building to be surplused and the commissioners agreed. That process will begin. Everyone was reminded there is a tour of the newly remodeled County Assessor's office at the conclusion of the meeting.

With no further business Roma Amundson moved to adjourn, Jane Raybould seconded. The vote carried and the meeting was adjourned.

APPLICATION AND CERTIFICATE FOR PAYMENT

AIA DOCUMENT G702

To Owner: City of Lincoln, Public Building Comm.
920 O Street, Room 203
Lincoln, NE 68508

From (Contractor): DICKEY ▪ HINDS ▪ MUIR Incorporated
PO Box 22555
Lincoln NE 68542-2555

Contract For: General Construction

Project: COL Hall of Justice City-County Security Upgrades
P.O. # : 0
Owner's Project #: 19-211
Project Mgr: Kerin Peterson
VIA (Architect): The Clark Enersen Partners
1010 Lincoln Mall, Suite 200
Lincoln, NE 68508

Application Number: 11/Partial
Period To: 08.31.20
Arch. Project Number: 0

Contract Date: 10.15.19
DHM Job# 9797
Invoice # 202008.009

Distribution to:
☐ Owner
☐ Architect
☐ Contractor

Please reference DHM's invoice number on all payments

CONTRACTOR'S APPLICATION FOR PAYMENT

APPLICATION IS MADE FOR PAYMENT, AS SHOWN BELOW, IN CONNECTION WITH THE CONTRACT.

1. Original Contract Sum		$465,500.00
2. Net Change by Change Orders		$12,528.00
3. Contract Sum to Date (Line 1 + 2)		$478,028.00
4. Total Completed and Stored to Date		$393,878.00
5. Retainage:		
A. 5% of Completed work.	$19,693.90	
B. 5% of Stored Material.	$0.00	
Total Retainage (Line 5A + 5B Total)		$19,693.90
6. Total Earned Less Retainage (Line 4 Less Line 5 Total)		$374,184.10
7. Less Previous Certificates for Payment (Line 6 from Prior Certificate)		$368,718.75
8. Current Payment Due		**$5,465.35**
9. Balance to Finish, Plus Retainage (Line 3 Less Line 6)		$103,843.90

Change Order Summary	Additions	Deductions
Total Changes Approved In Previous Months by Owner:	$12,528.00	$0.00
Total Approved This Month	$0.00	$0.00
Totals	$12,528.00	$0.00
Net Change by Change Orders >>>>>	$12,528.00	

THE UNDERSIGNED CONTRACTOR CERTIFIES THAT TO THE BEST OF THE CONTRACTOR'S KNOWLEDGE, INFORMATION AND BELIEF THE WORK COVERED BY THIS APPLICATION FOR PAYMENT HAS BEEN COMPLETED IN ACCORDANCE WITH THE CONTRACT DOCUMENTS, THAT ALL AMOUNTS HAVE BEEN PAID BY THE CONTRACTOR FOR WORK FOR WHICH PREVIOUS CERTIFICATES FOR PAYMENT WERE ISSUED AND PAYMENTS RECEIVED FROM THE OWNER, AND THAT CURRENT PAYMENT SHOWN HEREIN IS NOW DUE.

Contractor: DICKEY ▪ HINDS ▪ MUIR Incorporated

By: J. Adam Muir Date: 9/2/2020
J. Adam Muir, President
State of: Nebraska
County of: Lancaster
Subscribed and Sworn to Before me this 2nd day of Sept 2020
Notary Public: Rebecca S Clark
My Commission expires: 2-14-21

State of Nebraska – General Notary
REBECCA S CLARK
My Commission Expires
February 14, 2021

Architect's Certificate for Payment.

IN ACCORDANCE WITH THE CONTRACT DOCUMENTS, BASED ON ON-SITE OBSERVATIONS AND THE DATA COMPRISING THE ABOVE APPLICATION, THE ARCHITECT CERTIFIES TO THE OWNER THAT TO THE BEST OF THE ARCHITECT'S KNOWLEDGE, INFORMATION AND BELIEF THE WORK HAS PROGRESSED AS INDICATED, THE QUALITY OF THE WORK IS IN ACCORDANCE WITH THE CONTRACT DOCUMENTS, AND THE CONTRACTOR IS ENTITLED TO PAYMENT OF THE AMOUNT CERTIFIED.

Amount Certified...../....

(ATTACH EXPLANATION IF AMOUNT CERTIFIED DIFFERS FROM THE AMOUNT APPLIED FOR.)
ARCHITECT:

By: Date:

THIS CERTIFICATE IS NOT NEGOTIABLE. THE AMOUNT CERTIFIED IS PAYABLE ONLY TO THE CONTRACTOR NAMED HEREIN. ISSUANCE, PAYMENT AND ACCEPTANCE OF PAYMENT ARE WITHOUT PREJUDICE TO ANY RIGHTS OF THE OWNER OR CONTRACTOR UNDER THIS CONTRAC

CONTINUATION SHEET

DICKEY • HINDS • MUIR Incorporated
P.O. Box 22555
Lincoln, NE 68542-2555
Federal ID. # 47-0706351
Invoice # 202008.009

Project: COL Hall of Justice City-County Security Upgrades
P.O. # :
Owner's Proj #: 19-211

APPLICATION # : 11/Partial
APPLICATION DATE : 9/2/2020
PERIOD TO : 08.31.20
ARCH. PROJECT NO :
DHM JOB # : 9797

Percent Retainage= 5.00%

A	B	C	D	E	F	G		H	I
ITEM NO.	DESCRIPTION OF WORK	SCHEDULED VALUE	WORK COMPLETED PREVIOUS	WORK COMPLETED THIS APPLIC	MATERIALS STORED	COMPLETED & STORED	PERCENT	BALANCE TO FINISH	RETAINAGE 5.00%
1	General Conditions	7,238	6,150			6,150	84.97%	1,088.00	307.50
2	Enclosures	19,048	18,298			18,298	96.06%	750.00	914.90
3	Demolition Other	22,420	19,700			19,700	87.87%	2,720.00	985.00
4	Demolition Concr. Holes	291	291			291	100.00%	0.00	14.55
5	Concr. & Masonry Patching	3,673	2,800			2,800	76.23%	873.00	140.00
6	Concrete Flatwork	5,258	5,258			5,258	100.00%	0.00	262.90
7	Carpentry Rough	24,082	16,500	3,100		19,600	81.39%	4,482.00	980.00
8	Carpentry Finish	4,004	3,200			3,200	79.92%	804.00	160.00
9	Thermal & Moisture	2,079	1,200			1,200	57.72%	879.00	60.00
10	Mtl Drs & Frs Carpentry	3,615	2,250			2,250	62.24%	1,365.00	112.50
11	Specialities	12,964	9,200			9,200	70.97%	3,764.00	460.00
12	03-Precast Concrete	1,667	1,400			1,400	83.98%	267.00	70.00
13	04-Masonry	3,433	3,100			3,100	90.30%	333.00	155.00
14	04-Stone Panels	9,642	9,642		Not allowed	9,642	100.00%	0.00	482.10
15	05-Sheet Metal Fabrications	948	948		on this	948	100.00%	0.00	47.40
16	08-Doors & Fin Hard	61,195	47,225		project	47,225	77.17%	13,970.00	2,361.25
17	08-Alum Entrances	72,268	60,450			60,450	83.65%	11,818.00	3,022.50
18	09-Mtl Studs/ Drywall	38,980	34,550			34,550	88.64%	4,430.00	1,727.50
19	09-Carpeting	9,187	8,625			8,625	93.88%	562.00	431.25
20	09-Painting	2,234	1,325			1,325	59.31%	909.00	66.25
21	10-Wall & Door Protection (Abuse-resi	1,182	1,182			1,182	100.00%	0.00	59.10
22	10-Signage	1,503				0	0.00%	1,503.00	0.00
23	12-Marble Patching	2,653		2,653		2,653	100.00%	0.00	132.65
24	12-Blinds & Drapes	4,213				0	0.00%	4,213.00	0.00
25	12-Solid Surface Counter	843	843			843	100.00%	0.00	42.15
26	21-Fire Sprinklers	3,218	1,750			1,750	54.38%	1,468.00	87.50
27	22-Plumbing	18,953	18,953			18,953	100.00%	0.00	947.65
28	23-HVAC	68,624	45,550			45,550	66.38%	23,074.00	2,277.50
29	26-Electrical	50,775	45,775			45,775	90.15%	5,000.00	2,288.75
30	Bond	9,310	9,310			9,310	100.00%	0.00	465.50
						0	#DIV/0!	0.00	0.00

APPROVED CHANGES TO THE CONTRACT

ITEM NO.		SCHEDULED VALUE	WORK COMPLETED PREVIOUS	WORK COMPLETED THIS APPLIC	MATERIALS STORED	COMPLETED & STORED	PERCENT	BALANCE TO FINISH	RETAINAGE 5.00%
CO 1	CPR 1 - Electrical changes per RFI-00	-9119				0.00	0.00%	-9,119.00	0.00
CO 1	CPR 2 - ASI 002 Floor & Granite Pane	15527	12,650.00			12,650.00	81.47%	2,877.00	632.50
CO 2	CPR 3 - Added door operators	6120				0.00	0.00%	6,120.00	0.00
CO 2	CPR 4 - Calendar day extension	0	0.00			0.00	#DIV/0!	0.00	0.00
CO ?	CPR 6 Revised door hardware					0.00	#DIV/0!	0.00	0.00
CO ?	CPR 1 - Electrical changes per RFI-003 & PR-001					0.00	#DIV/0!	0.00	0.00
TOTALS		478,028	388,125.00	5,753.00	0.00	393,878.00	82.40%	84,150	19,693.90

1 = Original Contract Sum			465,500.00
2 = Change Orders			12,528.00
3 = Contract to Date			478,028.00
4 = Completed & Stored			393,878.00
5 = Retainage			
5a=	5.00%	19,693.90	
5b=	5.00%	0.00	19,693.90
6 = Earned Less Retainage			374,184.10
7 = Previous Payments (line 6 from previous)			368,718.75
8 = Payment Due >>>>>>>>>>>>>>>>>>			**5,465.35**
9 = Balance,Plus retainage			103,843.90

Col. D & E No. 5a	Col. F No. 5b
19,693.90	0.00

Retainage
19,693.90

THANK YOU

Appl #	11/Partial
Post	5,753.00

August 2020 Vouchers

VENDOR:	AMOUNT:
AKRS EQUIPMENT SOLUTIONS	$412.74
AMAZON	$128.57
BEATRICE LAW CARE	$476.75
BLACK HILLS	$465.89
BOB AND DON'S PLUMBING	$301.23
CITY OF LINCOLN INFORMATION SERVICES	$3,156.46
CLARK ENERSON PARTNERS	$487.10
CUMMINS INC	$413.63
DICKEY-HINDS-MUIR INC	$2,137.00
DISTRICT ENERGY CORPORATION	$239,281.35
DIAMOND VOGEL PAINT	$241.06
EGAN SUPPLY COMPANY	$82.40
ELECTRONIC CONTRACTING	$1,728.46
EXECUTIVE ANSWERING SERVICE	$45.50
FISH WINDOW CLEANING	$2,623.00
FORT TUFF	$1,825.75
GRAYBAR ELECTRIC	$944.52
HARDWOOD HEAVEN	$391.27
HOME DEPOT	$209.81
HUSKER ELECTRIC SUPPLY	$8.73
ALL NEEDS COMPUTER	$3,237.82
HOFELING ENTERPRISES	$30.00
INNERSPACE STUDIOS INC	$1,169.75
INTECONNECT INC	$1,365.60
JOHNSON CONTROLS	$9,723.99
JOHNSON HARDWARE	$177.60
KINER SUPPLY CO INC	$516.82
LAMPE'S CLEAN AIR SPECIALIST	$1,077.30
LAMPLIGHTERS LANDSCAPE	$100.00
LANCASTER COUNTY ENGINEER	$779.53
LINCOLN ELECTRIC SYSTEM	$47,637.80
LINCOLN GLASS INC.	$439.50
LINCOLN WATER SYSTEM	$1,461.57
MAHONEY FIRE SPRINKLER INC	$120.00
MENARDS	$504.65
MIDWEST ALARM SERVICES	$1,194.87
MIDWEST DOOR AND HARDWARE	$466.00
MIDWEST FLOOR COVERING INC	$357.00
MIDWEST OFFICE AUTOMATIONS INC.	$30.38
NEBRASKA STATE ELEVATOR/STATE OF NEBRASKA	$270.00
NORLAND PURE	$85.05
ORKIN	$296.75

PARAMOUNT LAUNDRY & TEXTILE	$1.85
PAYPAL	$61.00
Q P ACE HDWE	$76.46
REIMERS KAUFMAN	$14.30
SCHINDLER ELEVATOR CORP	$780.00
SCHRODER INVESTMENTS INC.	$5,398.00
SHERWIN WILLIAMS	$357.02
SINCLAIR HILLE AND ASSOCIATES	$4,882.50
TOTAL FIRE & SECURITY INC.	$3,995.18
URIBE REFUSE SERVICES LLC	$1,157.00
US WATER SERVICE	$800.22
VERIZON	$681.66
VOSS LIGHTING	$711.00
WHITE ELECTRIC	$35.10
WINDSTREAM	$2,396.44
Grand Total	**$347,750.93**

CITY OF LINCOLN \ LANCASTER COUNTY AND PUBLIC BUILDING COMMISSION

UNIT PRICE QUOTATION

IVAC and HVAC Controls Services, Bid No. 16-28 **Date:** 10/29/19

TO DEPARTMENT/AGENCY REPRESENTATIVE: Dee Adams - County Health

FROM (CONTRACTOR): **JOHNSON CONTROLS INC** **AWARD LEVEL: 3**

PROJECT DESCRIPTION: Provide replacement boiler shell model VW-78. Replacement shell to have new pressure relief valve, auquastats, manual reset low water cut-off, secondary low water cut-off. Existing burner and boiler recirculating pump to be removed and reused in the new replacement boiler shell.

TIME OF COMPLETION

Estimated Start Date	01/06/20
Number of Days to Complete	5

LABOR COST TABLE - HVAC

CONTRACTOR	RATE	NO. HOURS	TOTAL $ AMOUNT
Supervisor, Superintendent, or Foreman	82.50	0	$0.00
Journeyman	79.50	180	$14,310.00

LABOR COST TABLE - HVAC CONTROL SERVICES

CONTRACTOR	RATE	NO. HOURS	TOTAL $ AMOUNT
Supervisor	128.00	0	$0.00
Journeyman	128.00	0	$0.00

EQUIPMENT AND MATERIAL COSTS

ITEM	COST	% O. & P.	TOTAL $ AMOUNT
Total Rental Equipment Cost	375.00	25%	$468.75
Total Materials Cost	12815.00	30%	$16,659.50
Total Shipping/Freight Cost	0.00	0%	$0.00

SUBCONTRACTORS COSTS

SUB-CONTRACTOR (NAME)	COST	% O. & P.	TOTAL $ AMOUNT
Sub No. 1	0	25%	$0.00
Sub No. 2	0	25%	$0.00

TOTAL ESTIMATED COST (NOT TO EXCEED) $31,438.25

FIRM: **JOHNSON CONTROLS INC.**
BY: **JIM ZIEG**
ADDRESS: **2133 CORNHUSKER HWY**
LINCOLN, NE 68522
PHONE **402-435-4924**
FAX **402-435-4994**

Change Order #:
Accepted:
Not Accepted:

APPROVED BY:
Department/Agency Represenative

DATE:
PHONE:

Tracking No. 20080015

MEMORANDUM OF UNDERSTANDING FOR CITY OF LINCOLN, LANCASTER COUNTY, NEBRASKA and CITY OF LINCOLN-LANCASTER COUNTY PUBLIC BUILDING COMMISSION COOPERATIVE CONTRACT MOU084

Contract Title: Janitorial Supplies and Equipment

Cooperative Agency: OMNIA Partners

Lead Entity and Contract Number: University of California

Purchase Agreement 2020002299

(Hereinafter referred to as "the Lead Contract")

THIS MEMORANDUM OF UNDERSTANDING (MOU) is hereby issued to **The Home Depot Pro, 804 East Gate Drive, Suite 100, Mount Laurel, NJ 08054** hereinafter called "Contractor", from the City of Lincoln, Nebraska, a municipal corporation, and the County of Lancaster, Nebraska, a political subdivision of the State of Nebraska, and the City of Lincoln-Lancaster County Public Building Commission hereinafter called the "Owners" for the purpose of the Contractor and the Owners agreeing to the terms and conditions provided in this MOU

The Contractor and the Owners hereby agree to the following supplemental Terms and Conditions from those in the Lead Contract listed above:

TERMS AND CONDITIONS

A. PARTICIPATING TERM

The Owners shall participate in the Lead Contract for Janitorial Supplies and Equipment. The Memorandum of Understanding (MOU) will be effective upon execution through May 31, 2021. Upon conclusion of the initial term, the Owners have the option of renewing for Nine (9) additional one (1) year periods under the same terms and conditions according to the renewals allowed by the Lead Contract.

B. SCOPE

The Contractor shall provide the same scope of services and provide the same products as set forth in the Lead Contract.

C. PRICING

Pricing for these goods and/or services shall be pursuant to the Lead Contract, and Attachment A, copies thereof is attached to this Memorandum.

The Owners will pay for products/services, according to the Line Item pricing as listed in the Lead Contract, and Attachment A, copies thereof being attached to and made a part of this MOU. The Owners shall order on an as-needed basis for the duration of the MOU. The cost of products or services for City Departments shall not exceed $100,000.00 during the MOU term without approval by the City of Lincoln. The cost of products or services for County Agencies shall not exceed $100,000.00 during the MOU term without approval by the Board of Commissioners. The cost of products or services for the Public Building Commission shall not exceed $100,000.00 during the MOU term without approval by the Board of the Public Building Commission.

D. CONFLICTING TERMS

To the extent other terms and conditions attached hereto conflict with the terms and conditions stated herein, the parties agree that conflicts among the documents comprising this Memorandum shall be resolved according to priority, and that a document's priority shall be determined according to the order in which the document appears in the list below in section "E. Memorandum of Understanding Documents".

E. MOU DOCUMENTS

The following documents comprise the Memorandum of Understanding:

1. This Memorandum of Understanding and associated Terms and Conditions;
2. Insurance Requirements/Certificate of Insurance;
3. Copy of the Lead Contract, University of California Purchase Agreement 2020002299;
4. Attachment A
5. Tax Forms

F. LAWS

The Laws of the State of Nebraska shall govern the rights, obligations, and remedies of the Parties under this Memorandum of Understanding. During the term of the MOU, the Contractor shall perform all services and/or supply all goods in accordance with the established and applicable standards and in accordance with applicable State and Local laws.

G. IMPLIED REQUIREMENTS

All products and services not specifically mentioned in this document or the Lead Contract, but which are necessary to provide the functional capabilities described in the Lead Contract, shall be included.

H. CONTRACT MODIFICATION

The MOU shall be modified only by a written MOU amendment and approval of the parties. No alteration or variation of the terms and conditions of this Memorandum shall be valid unless made in writing and signed by the parties. Every amendment shall specify the date on which its provisions shall be effective.

I. TERMINATION

This MOU may be terminated by the following:

1. Termination for Convenience. Either party may terminate this MOU upon thirty (30) days written notice to the other party, for any reason, without penalty.
2. Termination for Cause. The Owners may terminate this MOU for cause if the Contractor:
    a. Refuses or fails to supply the proper labor, materials and equipment necessary to provide services and/or products pursuant to the Lead Contract or;
    b. Disregards Federal, State or local laws, ordinances, regulations, resolutions or orders or;
    c. Otherwise commits a substantial breach or default of any provision of the Lead Contract or this MOU. In the event of a substantial breach or default the Owners will provide the Contractor written notice of said breach or default and allow the Contractor ten (10) days from the date of the written notice to cure such breach or default. If said breach or default is not cured within ten (10) days from the date of notice, then the MOU shall terminate.
3. In the event that funding is not available to continue with services as written, the Owner(s) reserve the right to terminate use of the MOU for convenience with no financial obligation to the Contractor, Subcontractors or other stakeholders except for any amount due for services rendered or products supplied prior to notice of cancellation.

    The Owner(s) may terminate this MOU in whole or in part when funding is not lawfully available for expenditure or when sources of funding are terminated, suspended, reduced, or otherwise not forthcoming through no fault of the Owner(s). In the event of unavailability of funds to pay any amounts due under the MOU, the Owner(s) shall immediately notify the Contractor and the MOU shall terminate without penalty or expense to the Owner(s). Upon termination, the Owner(s) shall pay the Contractor for any approved and documented services or products completed or purchased up to the date of termination, but not to exceed the maximum amount allowed by the Lead Contract or this MOU.

J. SEVERABILITY

If any provision of this MOU is determined by a court of competent jurisdiction to be invalid or unenforceable to any extent, the remainder of the MOU shall not be affected and each provision of the MOU shall be enforced to the fullest extent permitted by law.

K. ASSIGNMENT

This MOU shall not be transferred to/or assigned to another Contractor without prior written consent confirming approval by the Owners. Any assignment without such prior written consent shall be absolutely void.

L. FORCE MAJEURE

Neither party shall be liable for any costs or damages from its inability to perform any of its obligations under the MOU due to a natural disaster, or other similar event outside the control

and not the fault of the affected party ("Force Majeure Event"). A Force Majeure Event shall not constitute a breach of the Lead Contract or this MOU. The party so affected shall immediately give notice to the other party of the Force Majeure Event. The Owners may grant relief from performance of the MOU if the Contractor is prevented from performance by a Force Majeure Event. The burden of proof for the need for such relief shall rest on the Contractor. To be released based on a Force Majeure Event, the Contractor shall file a written request for relief with the City of Lincoln/Lancaster County Purchasing Division. Labor disputes with the impacted party's own employees will not be considered a Force Majeure Event and will not suspend performance requirements under the Contract.

M. ATTORNEY'S FEES

In the event of any litigation, appeal, or other legal action to enforce any provision of the MOU, the Contractor agrees to pay all expenses of such action, as permitted by law, including Attorney's fees and costs, if the Owner is the prevailing party.

N. OWNER INCLUSION

It is understood and agreed by all parties that "Owner/s" shall include the City of Lincoln, Lancaster County, Nebraska and Lincoln-Lancaster County Public Building Commission. Whenever in the Contract documents, a singular entity is referenced (i.e., "the City" or "the County" or "Building Commission") it shall mean the "Owners" encompassing the City of Lincoln, Lancaster County and Lincoln-Lancaster County Building Commission. Notwithstanding the foregoing, the duties and obligations of the City, the County, and the Building Commission pursuant to the MOU shall be treated as divisible and severable duties and obligations, and default by any one of the City, the County, or the Building Commission shall not be attributed to any other of the Owners, but shall remain the sole obligation of the defaulting entity.

O. PAYMENT

Unless stated otherwise, the Owners will initiate payment within thirty (30) calendar days after:

1. All work has been performed and all equipment or other merchandise has been delivered.
2. All such labor and equipment and other materials have met all MOU specifications.
3. All such work has been approved by the Owner.
4. An invoice has been submitted which corresponds with the MOU amount and any subsequent changes approved by the Owners.

P. INSURANCE

The Contractor agrees to the insurance provisions required for all City/County and Building Commissions contracts (see *Insurance Requirements for City, County, and Building Commission*).

Q. TAXES AND TAX EXEMPTION CERTIFICATE

The Owners are generally exempt from any taxes imposed by the State or Federal government. A Tax Exemption Certificate will be provided as applicable.

The Water Division of the City of Lincoln is taxable per Reg. 066.14A and no exemption certificate will be issued.

R. INDEPENDENT CONTRACTOR

Employees of the Contractor shall not be deemed to be employees of the Owners and employees of the Owners shall not be deemed to be employees of the Contractor. The Contractor and the Owners shall be responsible to their respective employees for all salary and benefits. Neither the Contractor's employees nor the Owners' employees shall be entitled to any

salary, wages, or benefits from the other party, including but not limited to overtime, vacation, retirement benefits, workers' compensation, sick leave or injury leave. Contractor shall also be responsible for maintaining workers' compensation insurance, unemployment insurance for its employees, and for payment of all federal, state, local and any other payroll taxes with respect to its employees' compensation.

S. EQUAL EMPLOYMENT OPPORTUNITY

In connection with the carrying out of this project, the Contractor shall not discriminate against any employee or applicant for employment because of race, color, religion, sex, national origin, ancestry, disability, age or marital status. The Contractor will take affirmative action to ensure that applicants are employed, and that employees are treated during employment, without regard to their race, color, religion, sex, national origin, ancestry, disability, age or marital status. Such action shall include, but not be limited to, the following: employment, upgrading, demotion or transfer; recruitment or recruitment advertising; layoff or termination; rates of pay or other compensation; and selection for training, including apprenticeship.

T. E-VERIFY

In accordance with Neb. Rev. Stat. 4-108 through 4-114, the Contractor agrees to register with and use a federal immigration verification system, to determine the work eligibility status of new employees performing services within the state of Nebraska. A federal immigration verification system means the electronic verification of the work authorization program of the Illegal Immigration Reform and Immigrant Responsibility Act of 1996, 8 U.S.C 1324 a, otherwise known as the E-Verify Program, or an equivalent federal program designated by the United States Department of Homeland Security or other federal agency authorized to verify the work eligibility status of a newly hired employee pursuant to the Immigration Reform and Control Act of 1986. The Contractor shall not discriminate against any employee or applicant for employment to be employed in the performance of this section pursuant to the requirements of state law and 8 U.S.C.A 1324b. The contractor shall require any subcontractor to comply with the provisions of this section. For information on the E-Verify Program, go to www.uscis.gov/everify.

U. CITY AUDIT ADVISORY BOARD

All parties doing business with the Owners shall be subject to audit (City of Lincoln - Chapter 4.66 of the Lincoln Municipal Code) and shall make available to a Contract Auditor copies of all financial and performance related records and materials germane to the MOU/purchase order, as allowed by law.

V. INDEMNIFICATION

The Contractor shall indemnify and hold harmless the Owners from and against all losses, claims, damages, and expenses, including, attorney's fees arising out of or resulting from the performance of the MOU that results in bodily injury, sickness, disease, death, or to injury to or destruction of tangible property, including loss of use resulting therefrom and is caused in whole or in part by the Contractor, any subcontractor, any directly or indirectly employed by any of them or anyone for whose acts any of them may be liable. This section will not require the Contractor to indemnify or hold harmless the Owners for any losses, claims damages, and expenses arising out of or resulting from the sole negligence of the Owners.

In any and all claims against the Owners or any of its elected officials, members, officers or employees by an employee of the Contractor, any subcontractor, anyone directly or indirectly employed by any of them or by anyone for whose acts made by any of them may be liable, the indemnification obligation listed herein shall not be limited in any way by any limitation of the

amount or type of damages, compensation or benefits payable by or for the Contractor or any subcontractor under worker's compensation acts, disability benefit acts or other employee benefit acts.

W. WAIVER

Owners' failure or neglect to enforce any of its rights under this Memorandum will not be deemed to be a waiver of the Owners' rights.

X. THIRD PARTIES

This Memorandum is not intended to, and does not, create any rights or benefits on behalf of any person, whether an individual or an entity, other than the Parties involved. Owners shall not be obligated or liable hereunder to any person, whether an individual or an entity, other than Contractor.

Y. AUDIT

This MOU shall be subject to audit pursuant to Chapter 4.66 of the Lincoln Municipal Code and all parties shall make available to a contract auditor, as defined therein, copies of all financial and performance related records and materials germane to this Agreement, as allowed by law.

The Contractor and the Owners hereby agree that all the terms and conditions of this MOU shall be binding upon themselves, and their heirs, administrators, executors, legal and personal representatives, successors, and assigns.

The Contractor hereby agrees to this MOU upon completion of signatures on the Vendor Signature Page.

Vendor Signature Page

MEMORANDUM OF UNDERSTANDING
Janitorial Supplies and Equipment
MOU084
City of Lincoln, Lancaster County and
City of Lincoln-Lancaster County Public Building Commission
The Home Depot Pro

EXECUTION BY CONTRACTOR

IF A CORPORATION:

Attest:

_____ Seal
Secretary

_____
Name of Corporation

_____
Address

By: _____
Duly Authorized Official

_____
Legal Title of Official

IF OTHER TYPE OF ORGANIZATION:

_____
Name of Organization

_____
Type of Organization

_____
Address

By:_____
Member

By: _____
Member

IF AN INDIVIDUAL:

_____
Name

_____
Address

_____
Signature

City of Lincoln Signature Page

_____

MEMORANDUM OF UNDERSTANDING
Janitorial Supplies and Equipment
MOU084
City of Lincoln, Lancaster County and
City of Lincoln-Lancaster County Public Building Commission
The Home Depot Pro

EXECUTION BY THE CITY OF LINCOLN, NEBRASKA

ATTEST:

_____
City Clerk

CITY OF LINCOLN, NEBRASKA

_____
Leirion Gaylor Baird, Mayor

Approved by Executive Order No._____

dated _____

Lancaster County Signature Page

MEMORANDUM OF UNDERSTANDING
Janitorial Supplies and Equipment
MOU084
City of Lincoln, Lancaster County and
City of Lincoln-Lancaster County Public Building Commission
The Home Depot Pro

EXECUTION BY LANCASTER COUNTY, NEBRASKA

Contract Approved as to Form:

_____
Deputy Lancaster County Attorney

The Board of County Commissioners of
Lancaster, Nebraska

_____

_____

_____

_____

_____

dated _____

City of Lincoln-Lancaster County Public Building Commission
Signature Page

MEMORANDUM OF UNDERSTANDING
Janitorial Supplies and Equipment
MOU084
City of Lincoln, Lancaster County and
City of Lincoln-Lancaster County Public Building Commission
The Home Depot Pro

EXECUTION BY LINCOLN-LANCASTER COUNTY PUBLIC BUILDING COMMISSION

ATTEST:

_____ _____
Public Building Commission Attorney Chairperson, Public Building Commission

dated _____

INSURANCE CLAUSE FOR ALL CITY OF LINCOLN, LANCASTER COUNTY AND PUBLIC BUILDING COMMISSION CONTRACTS

Insurance coverage on this Contract will be required for the entities selected below
☒ City of Lincoln ☒ Lancaster County ☒ Public Building Commission

Vendors must provide coverage & documents related to the items with a check mark in Sections 1 – 1.9.
This includes proof of coverage and waivers as required below.
All Vendors must comply with Sections 2-8.

THE REQUIREMENTS HEREIN APPLY TO CONTRACTS TO BE ISSUED BY THE CITY OF LINCOLN, LANCASTER COUNTY, AND THE LINCOLN-LANCASTER COUNTY PUBLIC BUILDING COMMISSION.
FOR PURPOSES OF CERTIFICATES, ENDORSEMENTS AND OTHER PROOF REQUIRED HEREIN, ONLY INCLUDE THE ENTITY ISSUING THE CONTRACT.

FAILURE OF THE APPROPRIATE ENTITY (CITY, COUNTY, OR PUBLIC BUILDING COMMISSION) TO OBJECT TO THE FORM OF THE CERTIFICATE OR ENDORSEMENT OR TO DEMAND SUCH PROOF AS IS REQUIRED HEREIN SHALL NOT CONSTITUTE A WAIVER OF ANY OF THE INSURANCE REQUIREMENTS SET FORTH BELOW.

Insurance; Coverage Information

The Contractor shall, prior to beginning work, provide proof of insurance coverage in a form satisfactory to the City/County/PBC, which shall not withhold approval unreasonably. The coverages and minimum levels required by this Contract are set forth below and shall be in effect for all times that work is being done pursuant to this Contract. No work on the Project or pursuant to this Contract shall begin until all insurance obligations herein are met to the satisfaction of the City/County/PBC, which shall not unreasonably withhold approval. Self-insurance shall not be permitted unless consent is given by the City/County/PBC prior to execution of the Contract and may require submission of financial information for analysis. Deductible levels shall be provided in writing from the Contractor's insurer and will be no more than $25,000 per occurrence or as may be approved by the City or County as appropriate. Said insurance shall be written on an **OCCURRENCE** basis, and shall be **PRIMARY, with any insurance coverage maintained by the City/County/PBC being secondary or excess.**

Certificates

The Contractor shall provide certificates of insurance and such other proof, such as endorsements, as may be acceptable to the City or County (as appropriate) evidencing compliance with these requirements. The Contractor shall provide a Certificate of Insurance demonstrating the coverage required herein and the necessary endorsements or other proof and waivers described herein and below before being permitted to begin the work or project pursuant to this Contract.

☒ **1. Commercial General Liability**

The Contractor shall provide proof of Commercial General Liability Insurance with a minimum limit of not less than $1,000,000 each occurrence and $2,000,000 aggregate. These minimum limits can be met by primary and umbrella liability policies. Coverage shall include: Premises-Operations, Products/ Completed Operations, Contractual, Broad Form Property Damage, and Personal Injury. Such coverage shall be endorsed for the general aggregate to be on a **PER PROJECT** basis, and the Contractor shall provide an additional insured endorsement acceptable to the City/County/PBC. The required insurance must include coverage for all projects and operations of Contractor or similar language that meets the approval of the City/County/PBC, which approval shall not be unreasonably withheld.

☒ **1.1 Additional Insured (Requires an Endorsement Form)**

All Contractors shall provide an Additional Insured Endorsement form or other proof showing the City/County/PBC as additional insured for commercial general liability, auto liability and such other coverages as may be required by the City/County/PBC. The form or other proof shall be as is acceptable to the City/County Attorney.

☒ **1.2 Automobile Liability**

The Contractor shall provide proof of Automobile Liability coverage, which shall include: Owned, Hired and Non-Owned. Bodily Injury and Property Damage Combined Single Limit shall be at least $1,000,000 Per Accident.

☐ **1.3 Garage Keepers / Garage Liability**

The Contractor shall provide garage insurance, if required. Coverage shall include Garage Liability and Garage Keepers on a Direct Primary Basis, including Auto Physical Damage, with limits of not less than $1,000,000 each accident Bodily Injury and Property Damage combined liability and Actual Cash Value auto physical damage. Coverage symbol(s) 30 and 21 shall be provided, where applicable.

☒ **1.4 Workers' Compensation; Employers' Liability**

The Contractor shall provide proof of workers' compensation insurance of not less than minimum statutory requirements under the laws of the State of Nebraska and any other applicable State. Employers' Liability coverage with limits of not less than $500,000 each accident or injury shall be included. The Contractor shall provide the City/County/PBC with an endorsement for waiver of subrogation or other proof of such waiver as may be acceptable to the City or County. The Contractor shall also be responsible for ensuring that all subcontractors have workers' compensation insurance for their employees before and during the time any work is done pursuant to this Contract.

☐ **1.5 Builder's Risk Insurance**

The Contractor shall purchase and maintain builder's risk property insurance for all sites upon which construction is occurring as provided by Contract and all storage sites where equipment, materials, and supplies of any kind purchased pursuant to the Contract are being held or stored unless the Contractor receives notice that the City/County/PBC has obtained a builder's risk policy for itself. Except to the extent recoverable by Contractor from another subcontractor, deductibles shall be the responsibility of the Contractor. This coverage is required whenever the work under contract involves construction or repair of a building structure or bridge.

☐ **1.5.1 Waiver of Builder's Risk Insurance Carrier's Subrogation Rights**

The Contractor and its subcontractor(s) waive all rights of action and subrogation that the insurance company providing the builder's risk policy may have against each of them and/or the City/County/PBC, Architect, and the officers, agents and employees of any of them, for all claims, damages, injuries and losses, to the extent covered by such property insurance. Such waiver of subrogation shall be effective for such persons even though such persons would otherwise have a duty of indemnification or contribution, contractual or otherwise, and even though such persons did not pay the insurance premium directly or indirectly, and whether or not such persons had an insurable interest in any property damaged. The Contractor or subcontractor shall provide proof of such waiver.

☐ **1.6 Pollution Liability**

Contractors shall provide proof of pollution liability insurance arising out of all operations of the Contractors and subcontractors, due to discharge, dispersal, release, or escape of contaminants or pollutants into or upon land, the atmosphere or any watercourse or body of water with bodily injury and property damage limits of not less than $1,000,000 per occurrence and $2,000,000 annual aggregate for:

1) Bodily injury, sickness, disease, mental anguish or shock sustained by any person, including death;

2) Property damage including physical injury to or destruction of tangible property including the resulting loss of use thereof, clean-up costs, and the loss of use of tangible property that has not been physically injured or destroyed;

3)Defense including loss adjustment costs, charges and expenses incurred in the investigation, adjustment or defense of claims for such compensatory damages;

4) Definition of pollution conditions shall include asbestos, lead, and mold so that these risks are covered if caused by Contractor/successful candidate's work or operations.

5) Coverage is required on an occurrence form.

☐ **1.7 Errors and Omissions; Professional Liability**

Errors and Omissions or Professional Liability insurance, as may be required, covering damages arising out of negligent acts, errors, or omissions committed by Contractor in the performance of this Contract, with a liability limit of not less than $1,000,000 each claim. Contractor shall maintain this policy for a minimum of two (2) years after completion of the work or shall arrange for a two year extended discovery (tail) provision if the policy is not renewed. The intent of this policy is to provide coverage for claims arising out of the performance of professional Services under this contract and caused by any error, omission, breach or negligent act, including infringement of intellectual property (except patent and trade secret) of the Contractor. This coverage is required whenever the Contractor or service provider is required to be certified, licensed or registered by a regulatory entity and/or where the provider's judgment in planning and design could result in economic loss to City/County/PBC.

☐ **1.8 Railroad Contractual Liability Insurance**

If work is to be performed within 50 feet of any railroad property and affecting any railroad bridge or trestle, tracks, road beds, tunnel, underpass or railroad crossing, the Contractor must provide proof acceptable to the City or County that any exception for such work in the Contractor's commercial general liability policy has been removed or deleted.

☐ **1.8.1 Railroad Protective Liability**

If work is to be performed within 50 feet of any railroad property and affecting any railroad bridge or trestle, tracks, road beds, tunnel, underpass or crossing or otherwise required by the Special Provisions or applicable requirements of an affected railroad, the Contractor shall provide Railroad Protective Liability Insurance naming the affected railroad/s as insured with minimum limits for bodily injury and property damage of $2,000,000 per occurrence, $6,000,000 aggregate, or such other limits as required in the Special Provisions or by the affected railroad. The original of the policy shall be furnished to the railroad and a certified copy of the same furnished to the City/County/PBC Purchasing Department prior to any related construction or entry upon railroad premises by the Contractor or for work related to the Contract.

☐ **1.9 Cyber Insurance**

The Contractor shall maintain network risk and cyber liability coverage (including coverage for unauthorized access, failure of security, breach of privacy perils, as well at notification costs and regulatory defense) in an amount of not less than $1,000,000. Such insurance shall be maintained in force at all times during the term of the Contract and for a period of two years thereafter for services completed during the term of the Contract.

2. **Cancellation Notice**

All Contractors shall include an endorsement to provide for at least thirty (30) days' firm written notice in the event of cancellation during the term of the Contract and during the period of any required continuing coverages. The Contractor shall provide, prior to expiration of the policies, certificates and endorsement forms evidencing renewal insurance coverages. The parties agree that the failure of City/County/PBC to object to the form of a certificate and/or additional insured endorsement or endorsement forms provided shall not constitute a waiver of this requirement.

3. **Risk of Loss**

Except to the extent covered by the builder's risk insurance, the Contractor shall have the sole responsibility for the proper storage and protection of, and assumes all risk of loss of, any subcontractor's Work and tools, materials, equipment, supplies, facilities, offices and other property at or off the Project site. The Contractor shall be solely responsible for ensuring each subcontractor shall take every reasonable precaution in the protection of all structures, streets, sidewalks, materials and work of other subcontractors. Contractor shall protect its Work from damage by the elements or by other trades working in the area.

4. **Umbrella or Excess Liability**

The Contractor may use an Umbrella, Excess Liability, or similar coverage to supplement the primary insurance stated above in order to meet or exceed the minimum coverage levels required by this Contract.

5. **Minimum Scope of Insurance**

All Liability Insurance policies shall be written on an "Occurrence" basis only. All insurance coverage are to be placed with insurers authorized to do business in the State of Nebraska and must be placed with an insurer that has an A.M. Best's Rating of no less than A:VII unless specific approval has been granted otherwise.

6. **Indemnification**

To the fullest extent permitted by law the Contractor shall indemnify, defend, and hold harmless the Owner, its elected officials, officers, employees, agents, consultants, and employees of any of them from and against claims, damages, losses and expenses, including but not limited to attorney fees, arising out of or resulting from performance of the Work, provided that such claim, damage, loss or expense is attributable to bodily injury, sickness, disease or death, or to injury to or destruction of tangible or intangible property, including the Work itself, but only to the extent caused by the negligent, wrongful, or intentional acts or omissions of the Contractor, a subcontractor, anyone directly or indirectly employed by them or anyone for whose acts they may be liable, regardless of whether or not such claim, damage, loss or

expense is caused in part by the negligence of a party indemnified hereunder. In the event the claim, damage, loss or expense is caused in part by the negligence of a party indemnified hereunder, the indemnification by the Contractor shall be prorated based on the extent of the liability of the party indemnified hereunder. Such obligation shall not be construed to negate, abridge, or reduce obligations of indemnity which would otherwise exist as to a party or person described in this Section. Nothing herein shall be construed to be a waiver of sovereign immunity by the Owner.

7. Reservation of Rights

The City/County/PBC reserves the right to require a higher limit of insurance or additional coverages when the City/County/PBC determines that a higher limit or additional coverage is required to protect the City/County/PBC or the interests of the public. Such changes in limits or coverages shall be eligible for a change order or amendment to the Contract.

8. Sovereign Immunity

Nothing contained in this clause or other clauses of this Contract shall be construed to waive the Sovereign Immunity of the City/County/PBC.

9. Further Contact

For further information or questions concerning coverage or acceptable forms, Contractors may contact the Purchasing Division or the department that issued the bid or the request for proposal.

For general questions regarding Insurance Requirements, please contact Risk Management for the City or County.

DocuSign Envelope ID: 8ACC6917-B67C-447B-8477-D50D2789A916

UNIVERSITY OF CALIFORNIA

Purchasing Agreement # 2020002299

As a result of Request for Proposal # RFP-UC Janitorial Supplies & Equipment -Apr242019 for Janitorial Supplies and Equipment, the Master Agreement to furnish certain goods and services described herein and in the documents referenced herein ("Goods and/or Services") is made by and between The Regents of the University of California, a California public corporation ("UC") on behalf of the University of California and the supplier named below ("Supplier"). This Agreement is binding only if it is negotiated and executed by an authorized representative with the proper delegation of authority.

Supplier – The Home Depot Pro

1. Statement of Work

Supplier agrees to perform the Services listed in the statement of work attached as Attachment D ("Statement of Work") and any other documents referenced in the Incorporated Documents section herein, at the prices set forth in the Statement of Work and any other documents referenced in the Incorporated Documents section herein. Unless otherwise provided in the Agreement, UC will not be obligated to purchase a minimum amount of Goods and/or Services from Supplier.

2. Term of Agreement/Termination

a) The initial term of the Agreement will be from June 1, 2020 and through May 31, 2027 (Initial Term) and is subject to earlier termination as provided below. UC may renew the Agreement for three (3) successive **one (1)** -year periods (each, a Renewal Term), by providing Supplier with at least **thirty (30)** calendar days' written notice before the end of the Initial Term or any Renewal Term.

b) UC may terminate the Agreement for convenience by giving Supplier at least **thirty (30)** calendar days' written notice.

c) UC or Supplier may terminate the Agreement for cause by giving the other party at least **fifteen (15)** days' notice to cure a breach of the Agreement (Cure Period). If the breaching party fails to cure the breach within the Cure Period, the non-breaching party may immediately terminate the Agreement.

3. Purchase Order; Advance Payments

Unless otherwise provided in the Agreement, Supplier may not begin providing Goods and/or Services until UC approves a Purchase Order for the Goods and/or Services.

4. Pricing, Invoicing Method, and Settlement Method and Terms

Refer to Statement of Work or Purchase Order for Pricing. For system-wide agreements, each UC Location will specify the Invoicing Method and Payment Options that will apply, taking into account the operational capabilities of Supplier and the UC Location. See UC's Procure to Pay Standards http://www.ucop.edu/procurement-services/_files/Matrix%20for%20website.pdf for the options that will be considered. In the case of system-wide agreements, each UC Location will specify these terms in a Statement of Work or Purchase Order, as the case may be.]

Supplier will submit invoices following the designated invoice method directly to UC Accounts Payable Departments at each UC Location, unless UC notifies the Supplier otherwise by amendment to the Agreement.

Settlement Method and Terms

Notwithstanding the provisions of Article 3 of the Terms and Conditions of Purchase, the Settlement Method and Terms will be as follows: 2% 10, Net 30 or electronic payment method determined by the campus from which the Purchase Order is issued.

UNIVERSITY OF CALIFORNIA

Purchasing Agreement # 2020002299

5. Notices

As provided in the UC Terms and Conditions of Purchase, notices may be given by email, which will be considered legal notice only if such communications include the following text in the Subject field: FORMAL LEGAL NOTICE – [insert, as the case may be, Supplier name or University of California]. If a physical format notice is required, it must be sent by overnight delivery or by certified mail with return receipt requested, at the addresses specified below.

To UC, regarding confirmed or suspected Breaches as defined under Appendix – Data Security:

Name	David Rusting
Phone	510-987-0086
Email	David.rusting@ucop.edu
Address	1111 Franklin St., 7th Flr
	Oakland, CA 94607

To UC, regarding contract issues not addressed above:

Name	Greg Muller
Phone	858-534-9857
Email	glmuller@ucsd.edu
Address	10280 N. Torrey Pines Road, Suite 415
	La Jolla, CA 92037-0914

To Supplier:

Name	John Pettinelli
Phone	609-820-8593
Email	John_j_pettinelli@homedepot.com
Address	804 East Gate Drive Suite 100
	Mount Laurel, NJ 08054

6. Intellectual Property, Copyright and Patents

The Goods and/or Services **do not** involve Work Made for Hire

7. Patient Protection and Affordable Care Act (PPACA)

The Services do not involve temporary or supplementary staffing, and they are not subject to the PPACA warranties in the T&Cs.

8. Prevailing Wages

Supplier is not required to pay prevailing wages when providing the Services.

9. Fair Wage/Fair Work

Supplier is required to pay the UC Fair Wage (defined as $13 per hour as of 10/1/15, $14 per hour as of 10/1/16, and $15 per hour as of 10/1/17) when providing the Services.

UNIVERSITY OF CALIFORNIA

Purchasing Agreement # 2020002299

10. Restriction Relating to Consulting Services or Similar Contracts – Follow-on Contracts

Please note a Supplier that is awarded a consulting services or similar contract cannot later submit a bid or be considered for any work "required, suggested, or otherwise deemed appropriate" as the end product of the Services (*see* Public Contract Code Section 10515).

11. Insurance

Deliver the PDF version of the Certificate of Insurance to UC's Buyer, by email with the following text in the Subject field: CERTIFICATE OF INSURANCE – The Home Depot Pro.

12. Cooperative Purchasing

Supplier agrees to extend for Goods and/or Services to participating agencies (public and private schools, colleges and universities, cities, counties, non-profits and all governmental entities) registered with OMNIA Partners, Public Sector under the terms of this agreement. All contractual administration issues (e.g. terms and conditions, extensions/renewals, product pricing and Core List) will remain UC's responsibility except as outlined in the above referenced Request for Proposal # RFP-UC Janitorial Supplies & Equipment -Apr242019. Operational issues, fiduciary responsibility, payment issues, performance issues and liabilities, and disputes involving individual participating agencies will be addressed, administered, and resolved by each participating agency.

13. Records about Individuals

Records created pursuant to the Agreement that contain personal information about individuals (including statements made by or about individuals) may become subject to the California Information Practices Act of 1977, which includes a right of access by the subject individual. While ownership of confidential or personal information about individuals is subject to negotiated agreement between UC and Supplier, records will normally become UC's property, and subject to state law and UC policies governing privacy and access to files. When collecting the information, Supplier must inform the individual that the record is being made, and the purpose of the record. Use of recording devices in discussions with employees is permitted only as specified in the Statement of Work.

14. Amendments to UC Terms and Conditions of Purchase

The UC Terms and Conditions of Purchase, dated February 27th, 2020 will govern this Agreement and are attached as Attachment A.

15. Incorporated Documents

This Agreement and its Incorporated Documents contain the entire agreement between the Parties, in order of the below precedent, concerning its subject matter and shall supersede all prior or other agreements, oral and written declarations of intent and other legal arrangements (whether binding or non-binding) made by the Parties in respect thereof.

a. UC Terms and Conditions of Purchase, dated 2-27-2020 - AMENDED, Attachment A
b. UC Data Security and Privacy Appendix, dated 8-12-2019, Attachment B
c. UC Electronic Commerce Appendix, dated 7-19-19, Attachment C

DocuSign Envelope ID: 8ACC6917-B67C-447B-8477-D50D2789A916

UNIVERSITY OF CALIFORNIA

Purchasing Agreement # 2020002299

d. RFP-UC Janitorial Supplies & Equipment -Apr242019 Janitorial RFP SOW - Attachment D
e. Pricing – Attachment E
f. Supplier response to RFP-UC Janitorial Supplies & Equipment -Apr242019 – Attachment F

16. Entire Agreement

The Agreement and its Incorporated Documents contain the entire Agreement between the parties and supersede all prior written or oral agreements with respect to the subject matter herein.

This Agreement can only be signed by an authorized representative with the proper delegation of authority.

THE REGENTS OF THE UNIVERSITY OF CALIFORNIA

DocuSigned by:
William Cooper
1E90FA0709254CF...
(Signature)

William Cooper, Chief Procurement Officer
(Printed Name, Title)

6/1/2020
(Date)

The Home Depot Pro

(Signature)

Ran Garver
Director of Compliance
(Printed Name, Title)

29 May 2020
(Date)

DocuSign Envelope ID: 8ACC6917-B67C-447B-8477-D50D2789A916

UNIVERSITY OF CALIFORNIA

Terms and Conditions of Purchase

ARTICLE 1 – GENERAL

These Terms and Conditions of Purchase ("Terms and Conditions") are a part of the Master Agreement dated June 1, 2020, Agreement No 2020002299, by and between The Regents of the University of California ("UC") and Home Depot U.S.A., Inc. d/b/a The Home Depot Pro ("Supplier"). As used herein, the term "Supplier" includes Supplier and its sub-suppliers at any tier. As used herein, "UC" refers to The Regents of the University of California, a corporation described in California Constitution Art. IX, Sec. 9, on behalf of the UC Locations identified in the Agreement and/or the PO. UC and Supplier individually will be referred to as "Party" and collectively as "Parties." The equipment, materials, or supplies ("Goods") and/or services ("Services") furnished by Supplier (together, the "Goods and Services") and covered by the UC Purchase Order ("PO") are governed by the terms and conditions set forth herein. Any defined terms not defined in these Terms and Conditions of Purchase will have the meaning ascribed to such term in any of the Agreement. No other terms or conditions will be binding upon the Parties unless accepted by them in writing. Written acceptance or shipment of all or any portion of the Goods, or the performance of all or any portion of the Services, covered by the Agreement, will constitute Supplier's unqualified acceptance of all of the Agreement's terms and conditions. The terms of any proposal referred to in the Agreement are included and made a part of the Agreement only to the extent the proposal specifies the Goods and/or Services ordered, the price therefor, and the delivery thereof, and then only to the extent that such terms are consistent with the terms and conditions of the Agreement.

ARTICLE 2 – TERM AND TERMINATION

A. As applicable, the term of the Agreement ("Initial Term") will be stated in the Agreement. Following the Initial Term, the Agreement may be extended by written mutual agreement.
B. UC's obligation to proceed is conditioned upon the appropriation of state, federal and other sources of funds not controlled by UC ("Funding"). UC will have the right to terminate the Agreement without damage, penalty, cost or further obligation in the event that through no action or inaction on the part of UC, the Funding is withdrawn.
C. UC may, by written notice stating the extent and effective date thereof, terminate the Agreement for convenience in whole or in part, at any time. The effective date of such termination shall be consistent with any requirements for providing notice specified in the Agreement, or immediate if no such terms are set forth in the Agreement. As specified in the termination notice, UC will pay Supplier as full compensation the pro rata Agreement price for performance through the later of the date that (i) UC provided Supplier with notice of termination or (ii) Supplier's provision of Goods and/or Services will terminate.
D. UC may by written notice terminate the Agreement for Supplier's breach of the Agreement, in whole or in part, at any time, if Supplier refuses or fails to comply with the provisions of the Agreement, or so fails to make progress as to endanger performance and does not cure such failure within ten (10) business days, or repeatedly fails to supply the Goods and/or Services within the time specified or any written extension thereof. In such event, UC may purchase or otherwise secure Goods and/or Services.
E. UC's Appendix – Data Security, Appendix – BAA, and/or Appendix – GDPR will control in the event that one or more appendices are incorporated into the Agreement and conflicts with the provisions of this Article.

ARTICLE 3 – PRICING, INVOICING METHOD, AND SETTLEMENT METHOD AND TERMS.

Pricing is set forth in the Agreement or Purchase Order, and the amount UC is charged and responsible for shall not exceed the amount specified in the Agreement unless UC has given prior written approval. Unless otherwise agreed in writing by UC, Supplier will use the invoicing method and payment settlement method (and will extend the terms applicable to such settlement method) set forth in UC's Supplier Invoicing, Terms & Settlement Matrix. UC will pay Supplier, upon submission of acceptable invoices, for Goods and/or Services provided and accepted. Invoices must be itemized and reference the Agreement or Purchase Order number. UC will not pay shipping, packaging or handling expenses, unless specified in the Agreement or Purchase Order. Unless otherwise provided, freight is to be FOB destination. Any of Supplier's expenses that UC agrees to reimburse will be reimbursed under UC's Travel Policy, which may be found at http://www.ucop.edu/central-travel-management/resources/index.html. Where applicable, Supplier will pay all taxes imposed on Supplier in connection with its performance under the Agreement, including any federal, state and local income, sales, use, excise and other taxes or assessments. Pricing is exclusive of and UC shall be responsible for all sales, use and excise taxes, and any other similar taxes, duties and charges of any kind imposed by any governmental authority on any amounts payable by UC under the Agreement or Purchase Order hereunder. Notwithstanding any other provision to the contrary, UC will not be responsible for any fees, interest or surcharges Supplier wishes to impose.

DocuSign Envelope ID: 8ACC6917-B67C-447B-8477-D50D2789A916

ARTICLE 4 – INSPECTION.

UC will inspect the Goods upon receipt. Any issues with nonconformities or non-delivery of any quantities of Goods must be reported within 30 days of delivery (or for non-delivery, within 5 days after the date that the Goods would have been received in the normal course of business). Supplier cannot guarantee responsibility for the resolution of issues reported after this 30-day period, after which UC will be deemed to have accepted the Goods. Examples of nonconformities are: damaged goods, incomplete orders, incorrect items, and/or over shipments. If UC notifies Supplier of any non-conformities within the timeframe specified above, Supplier shall, at UC's discretion, (i) replace such non-conforming Goods (or Goods not delivered) with conforming Goods, or (ii) credit or refund the price paid by UC for such nonconforming Goods (or Goods not delivered). UC acknowledges and agrees that the remedies set forth in this Section are UC's exclusive remedies for the delivery of non-conforming Goods, and that otherwise, UC has no right to request return of Goods purchased hereunder.

ARTICLE 5 – ASSIGNED PERSONNEL; CHARACTER OF SERVICES

Supplier will provide the Services as an independent contractor and furnish all equipment, personnel and materiel sufficient to provide the Services expeditiously and efficiently, during as many hours per shift and shifts per week, and at such locations as UC may so require. Supplier will use commercially reasonable efforts to use only its best-qualified personnel to work under the Agreement. Should UC inform Supplier that anyone providing the Services is not working to this standard, Supplier will promptly remove such personnel from providing Services and he or she will not again, without UC's written permission, be assigned to provide Services. At no time will Supplier or Supplier's employees, sub-suppliers, agents, or assigns be considered employees of UC for any purpose, including but not limited to workers' compensation provisions. Supplier shall not have the power nor right to bind or obligate UC, and Supplier shall not hold itself out as having such authority. Supplier shall be responsible to UC for all Services performed by Supplier's employees, agents and subcontractors, including being responsible for ensuring payment of all unemployment, social security, payroll, contributions and other taxes with respect to such employees, agents and subcontractors.

ARTICLE 6 – WARRANTIES

In addition to the warranties set forth in Articles 11, 12, 17, 23, 24, 25 and 26 herein, Supplier makes the following warranties. Supplier acknowledges that failure to comply with any of the warranties in the Agreement will constitute a material breach of the Agreement and UC will have the right to terminate the Agreement without damage, penalty, cost or further obligation.

A. General Warranties. Supplier represents, warrants and covenants that: (i) Supplier is free to enter into this Agreement and that Supplier is not, and will not become, during the Term, subject to any restrictions that might restrict or prohibit Supplier from performing the Services or providing the Goods ordered hereunder; (ii) Supplier will comply with all applicable laws, rules and regulations in performing Supplier's obligations hereunder; (iii) the Goods and/or Services shall be rendered with promptness and diligence and shall be executed in a skilled manner by competent personnel, in accordance with the prevailing industry standards; and if UC Appendix Data Security is NOT included:(iv) Supplier has developed a business interruption and disaster recovery program and is executing such program to assess and reduce the extent to which Supplier's hardware, software and embedded systems may be susceptible to errors or failures in various crisis (or force majeure) situations; (v) if Supplier uses electronic systems for creating, modifying, maintaining, archiving, retrieving or transmitting any records, including test results that are required by, or subject to inspection by an applicable regulatory authority, then Supplier represents and warrants that Supplier's systems for electronic records are in compliance; and (vi) Supplier agrees that the Goods and/or Services furnished under the Agreement will be covered by the most favorable warranties Supplier gives to any customer for the same or substantially similar goods or services, or such other more favorable warranties as specified in the Agreement. The rights and remedies so provided are in addition to and do not limit any rights afforded to UC by any other article of the Agreement.

B. Permits and Licenses. Supplier agrees to procure all necessary permits or licenses and abide by all applicable laws, regulations and ordinances of the United States and of the state, territory and political subdivision or any other country in which the Goods and/or Services are provided.

C. Federal and State Water and Air Pollution Laws. Where applicable, Supplier warrants that it complies with the requirements in UC Business and Finance Bulletin BUS-56 (Materiel Management; Purchases from Entities Violating State or Federal Water or Air Pollution Laws). Consistent with California Government Code 4477, these requirements do not permit UC to contract with entities in violation of Federal or State water or air pollution laws.

D. Web Accessibility Requirements. As applicable to the Supplies and/or Services being provided under the Agreement, Supplier warrants that:

DocuSign Envelope ID: 8ACC6917-B67C-447B-8477-D50D2789A916

1. It complies with California and federal disability laws and regulations; and
2. The Goods and/or Services will conform to the accessibility requirements of WCAG 2.0AA.
3. Supplier agrees to promptly respond to and resolve any complaint regarding accessibility of its Goods and/or Services;

E. General Accessibility Requirements. Supplier warrants that:
1. It will comply with California and federal disability laws and regulations;
2. Supplier will promptly respond to remediate to any identified accessibility defects in the Goods and Services to conform to WCAG 2.0 AA; and
3. Supplier agrees to promptly respond to and use reasonable efforts to resolve and remediate any complaint regarding accessibility of its Goods and/or Services.

F. Warranty of Quiet Enjoyment. Supplier warrants that Supplier has the right of Quiet Enjoyment in, and conveys the right of Quiet Enjoyment to UC for UC's use of, any and all intellectual property that will be needed for Supplier's provision, and UC's use of, the Goods and/or Services provided by Supplier under the Agreement.

G. California Child Abuse and Neglect Reporting Act ("CANRA"). Where applicable, Supplier warrants that it complies with CANRA.

H. Debarment and Suspension. Supplier warrants that it is not presently debarred, suspended, proposed for debarment, or declared ineligible for award of federal contracts or participation in federal assistance programs or activities.

I. UC Trademark Licensing Code of Conduct. If the Goods will bear UC's name (including UC campus names, abbreviations of these names, UC logos, UC mascots, or UC seals) or other trademarks owned by UC, Supplier warrants that it holds a valid license from UC and complies with the Trademark Licensing Code of Conduct policy, available at http://policy.ucop.edu/doc/3000130/TrademarkLicensing.

J. Outsourcing (Public Contract Code section 12147) Compliance. Supplier warrants that if the Agreement will displace UC employees, no funds paid under the Agreement will be used to train workers who are located outside of the United States, or plan to relocate outside the United States as part of the Agreement. Additionally, Supplier warrants that no work will be performed under the Agreement with workers outside the United States, except as described in Supplier's bid. If Supplier or its sub-supplier performs the Agreement with workers outside the United States during the life of the Agreement and Supplier did not describe such work in its bid, Supplier acknowledges and agrees that (i) UC may terminate the Agreement without further obligation for noncompliance, and (ii) Supplier will forfeit to UC the amount UC paid for the percentage of work that was performed with workers outside the United States and not described in Supplier's bid.

ARTICLE 7 – INTELLECTUAL PROPERTY, COPYRIGHT, PATENTS, AND DATA RIGHTS

A. Goods and/or Services Not Involving Work Made for Hire.
1. If the Goods and/or Services do not involve work made for hire, and in the event that Supplier uses any Pre-Existing Materials in the Deliverables in which Supplier has an ownership interest, UC is hereby granted, and will have, a non-exclusive, royalty-free, irrevocable, perpetual, paid-up, worldwide license (with the right to sublicense) to make, have made, copy, modify, make derivative works of, use, perform, display publicly, sell, and otherwise distribute such Pre-Existing Materials in connection with the Deliverables.
2. The Deliverables must be new and original. Supplier must not use any Pre-Existing Materials in the Deliverables without UC's prior written permission.
3. Whenever any invention or discovery is made or conceived by Supplier in the course of or in connection with the Agreement, Supplier will promptly furnish UC complete information with respect thereto and UC will have the sole power to determine whether and where a patent application will be filed and to determine the disposition of title to and all rights under any application or patent that may result.
4. Supplier is specifically subject to an obligation to, and hereby does, assign all right, title and interest in any such intellectual property rights to UC as well as all right, title and interest in tangible research products embodying any such inventions whether the inventions are patentable or not. Supplier agrees to promptly execute any additional documents or forms that UC may require in order to effectuate such assignment.

B. General. Should the Goods and/or Services become, or in Supplier's opinion be likely to become, the subject of a claim of infringement of any patent, copyright, trademark, trade name, trade secret, or other proprietary or contractual right of any third party, Supplier will provide written notice to UC of the circumstances giving rise to such claim or likely claim. In the event that UC receives notice of a claim of infringement or is made a party to or is threatened with being made a party to any claim of infringement related to the Goods and/or Services, UC will provide Supplier with notice of such claim or threat. Following receipt of such notice, Supplier will either (at Supplier's sole election) (i) procure for UC the right to continue to use the affected portion of the Goods and/or Services, or (ii) replace or otherwise modify the affected portion of the Goods and/or Services to make them non-infringing, or obtain a reasonable substitute product for the affected portion of the Goods and/or Services, provided that any replacement, modification or substitution under this paragraph does not effect a material change in the Goods and/or Services' functionality. If none of the foregoing options is reasonably

DocuSign Envelope ID: 8ACC6917-B67C-447B-8477-D50D2789A916

acceptable to UC, UC will have the right to terminate the Agreement without damage, penalty, cost or further obligation.

C. UC Rights to Institutional Information. Institutional Information shall belong exclusively to UC and unless expressly provided, this Agreement shall not be construed as conferring on Supplier any patent, copyright, trademark, license right or trade secret owned or obtained by UC. Any right for Supplier to use Institutional Information is solely provided on a non-exclusive basis, and only to the extent required for Supplier to provide the Goods or Services under the Agreement. As used herein, "Institutional Information" means any information or data created, received, and/or collected by UC or on its behalf, including but not limited to application logs, metadata and data derived from such data.

ARTICLE 8 – INDEMNITY AND LIABILITY

To the fullest extent permitted by law, Supplier will defend, indemnify, and hold harmless UC, its officers, employees, and agents, from and against all losses, expenses (including, without limitation, reasonable attorneys' fees and costs), damages, and liabilities of any kind resulting from the negligent acts or willful misconduct of Supplier, its officers, employees, agents, sub-suppliers, or anyone directly or indirectly employed by Supplier, or any person or persons under Supplier's direction and control during delivery of the Goods or provision of Services on UC property. UC agrees to provide Supplier with prompt notice of any such claim or action and to permit Supplier to defend any claim or action, and that UC will cooperate fully in such defense. UC retains the right to participate in the defense against any such claim or action, and the right to consent to any settlement, which consent will not unreasonably be withheld.

In the event Appendix DS applies to this Agreement, Supplier shall reimburse or otherwise be responsible for any costs, fines or penalties imposed against UC as a result of Supplier's Breach of Institutional Information and/or failure to cooperate with UC's response to such Breach. As used herein, "Breach" means: (1) any disclosure of Institutional Information to an unauthorized party or in an unlawful manner; (2) unauthorized or unlawful acquisition of information that compromises the security, confidentiality or integrity of Institutional Information and/or IT Resources; and (3) the acquisition, access, use, or disclosure of Protected Health Information or medical information in a manner not permitted under the Health Insurance Portability and Accountability Act (HIPAA) or California law. "IT Resources" means IT infrastructure, cloud services, software, and/or hardware with computing and/or networking capability that is Supplier owned/managed, or UC-owned, or a personally owned device that stores Institutional Information, is connected to UC systems, is connected to UC networks, or is used for UC business.

ARTICLE 9 – INSURANCE

Supplier, at its sole cost and expense, will insure its activities in connection with providing the Goods and/or Services and obtain, keep in force, and maintain the following insurance with the minimum limits set forth below, unless UC specifies otherwise:

A. Commercial Form General Liability Insurance (contractual liability included) with limits as follows:
   1. Each Occurrence $ 1,000,000
   2. Products/Completed Operations Aggregate $ 2,000,000
   3. Personal and Advertising Injury $ 1,000,000
   4. General Aggregate $ 2,000,000

B. Business Automobile Liability Insurance for owned, scheduled, non-owned, or hired automobiles with a combined single limit of not less than one million dollars ($1,000,000) per occurrence. (Required only if Supplier drives on UC premises or transports UC employees, officers, invitees, or agents in the course of supplying the Goods and/or Services to UC.)

C. If applicable, Professional Liability Insurance with a limit of two million dollars ($2,000,000) per occurrence or claim with an aggregate of not less than two million dollars ($2,000,000). If this insurance is written on a claims-made form, it will continue for three years following termination of the Agreement. The insurance will have a retroactive date of placement prior to or coinciding with the effective date of the Agreement.

D. Workers' Compensation as required by applicable state law and Employer's Liability with limits of one million dollars ($1,000,000) per occurrence. Workers' Compensation as required by applicable state law and Employer's Liability with limits of one million dollars ($1,000,000) per occurrence.

E. If applicable, Supplier Fidelity Bond or Crime coverage for the dishonest acts of its employees in a minimum amount of one million dollars ($1,000,000). Supplier will endorse such policy to include a "Regents of the University of California Coverage" or "Joint Payee Coverage" endorsement. UC and, if so requested, UC's officers, employees, agents and sub-suppliers will be named as "Loss Payee, as Their Interest May Appear" in such Fidelity Bond.

F. In the event Appendix DS applies to this Agreement, Supplier, at its sole cost and expense, will obtain, keep in force, and maintain one or more insurance policies that provide coverage for technology, professional liability, data protection, and/or cyber liability. Typically referred to as Privacy, Technology and Data Security Liability, Cyber Liability, or Technology Professional Liability Insurance, it will cover liabilities for financial loss due to the acts, omissions, or intentional misconduct of Supplier, its officers, employees, agents, sub-suppliers, or anyone directly or indirectly employed by Supplier, or any person or persons under Supplier's direction and control, in connection with the performance of this Agreement, as well as all Supplier costs, including damages it is obligated to pay UC or any third party, that are associated with any confirmed or suspected Breach or compromise of Institutional Information. In some cases, Professional Liability policies may include some coverage for data breaches or loss of Institutional Information. Regardless of the type of policy(ies) in place, such coverage will include without limitation: (i) costs to notify parties whose data were lost or compromised; (ii) costs to provide credit monitoring and credit restoration services to parties whose data were lost or compromised; (iii) costs associated with third party claims arising from the confirmed or suspected Breach or loss of Institutional Information, including litigation costs and settlement costs; (iv) any investigation, enforcement, fines and penalties, or similar miscellaneous costs; and (v) any payment made to a third party as a result of extortion related to a confirmed or suspected Breach. The following insurance coverage is based on the highest Protection Level Classification of Institutional Information identified in Exhibit 1 to Appendix DS:
   1. P1 - This insurance policy must have minimum limits of $500,000 each occurrence and $500,000 in the aggregate.
   2. P2 - This insurance policy must have minimum limits of $1,000,000 each occurrence and $1,000,000 in the aggregate.
   3. P3 and P4, less than 70,000 records - this insurance policy must have minimum limits of $5,000,000 each occurrence and $5,000,000 in the aggregate.
   4. P3 and P4, 70,000 or more records - this insurance policy must have minimum limits of $10,000,000 each occurrence and $10,000,000 in the aggregate.

Protection Level Classifications are defined in the UC Systemwide Information Security Classification of Information and IT Resources: https://security.ucop.edu/policies/institutional-information-and-it-resource-classification.html

G. Additional other insurance in such amounts as may be reasonably required by UC against other insurable risks relating to performance. If the above insurance is written on a claims-made form, it will continue for three years following termination of the Agreement. The insurance will have a retroactive date of placement prior to or coinciding with the effective date of the Agreement. If the above insurance coverage is modified, changed or cancelled, Supplier will provide UC with not less than fifteen (15) days' advance written notice of such modification, change, or cancellation, and will promptly obtain replacement coverage that complies with this Article.

I. The coverages referred to under A and B of this Article must include UC as an additional insured. It is understood that the coverage and limits referred to under A, B and C of this Article will not in any way limit Supplier's liability. Supplier will furnish UC with certificates

of insurance (and the relevant endorsement pages) evidencing compliance with all requirements prior to commencing work under the Agreement. Such certificates will:

1. Indicate that The Regents of the University of California has been endorsed as an additional insured for the coverage referred to under A and B of this Article. This provision will only apply in proportion to and to the extent of the negligent acts or omissions of Supplier, its officers, agents, or employees.
2. Include a provision that the coverage will be primary and will not participate with or be excess over any valid and collectible insurance or program of self-insurance carried or maintained by UC.

ARTICLE 10 – USE OF UC NAME AND TRADEMARKS

Supplier will not use the UC name, abbreviation of the UC name, trade names and/or trademarks (i.e., logos and seals) or any derivation thereof, in any form or manner in advertisements, reports, or other information released to the public, or place the UC name, abbreviations, trade names and/or trademarks or any derivation thereof on any consumer goods, products, or services for sale or distribution to the public, without UC's prior written approval. Supplier agrees to comply at all times with California Education Code Section 92000.

ARTICLE 11 – FEDERAL FUNDS

Supplier who supplies Goods and/or Services certifies and represents its compliance with the following clauses, as applicable. Supplier shall promptly notify UC of any change of status with regard to these certifications and representations. These certifications and representations are material statements upon which UC will rely.

A. For commercial transactions involving funds on a federal contract (federal awards governed by the FAR), the following provisions apply, as applicable:
   1. FAR 52.203-13, Contractor Code of Business Ethics and Conduct;
   2. FAR 52.203-17, Contractor Employee Whistleblower Rights and Requirement to Inform Employees of Whistleblower Rights;
   3. FAR 52.203-19, Prohibition on Requiring Certain Internal Confidentiality Agreements or Statements;
   4. FAR 52.219-8, Utilization of Small Business Concerns;
   5. FAR 52.222-17, Non-displacement of Qualified Workers;
   6. FAR 52.222-21, Prohibition of Segregated Facilities;
   7. FAR 52.222-26, Equal Opportunity;
   8. FAR 52.222-35, Equal Opportunity for Veterans;
   9. FAR 52.222-36, Equal Opportunity for Workers with Disabilities;
   10. FAR 52.222-37, Employment Reports on Veterans;
   11. FAR 52.222-40, Notification of Employee Rights Under the National Labor Relations Act;
   12. FAR 52.222-41, Service Contract Labor Standards;
   13. FAR 52.222-50, Combating Trafficking in Persons;
   14. FAR 52.222-51, Exemption from Application of the Service Contract Labor Standards to Contracts for Maintenance, Calibration, or Repair of Certain Equipment - Requirements;
   15. FAR 52.222-53, Exemption from Application of the Service Contract Labor Standards to Contracts for Certain Services - Requirements;
   16. FAR 52.222-54, Employment Eligibility Verification;
   17. FAR 52.222-55, Minimum Wages Under Executive Order 13658;
   18. FAR 52.222-62, Paid Sick Leave under Executive Order 13706;
   19. FAR 52.224-3, Privacy Training;
   20. FAR 52.226-6, Promoting Excess Food Donation to Nonprofit Organizations;
   21. FAR 52.233-1, Disputes; and
   22. FAR 52.247-64, Preference for Privately Owned U.S.-Flag Commercial Vessels.

B. For non-commercial transactions involving funds on a federal contract, the UC Appendix titled *'Federal Government Contracts Special terms and Conditions (Non-Commercial Items or Services)'* and located at www.ucop.edu/procurement-services/policies-forms/index.html is hereby incorporated herein by this reference.

C. For transactions involving funds on a federal grant or cooperative agreement (federal awards governed by eCFR Title 2, Subtitle A, Chapter II, Part 200) the following provisions apply, as applicable:

DocuSign Envelope ID: 8ACC6917-B67C-447B-8477-D50D2789A916

1. Rights to Inventions. If Supplier is a small business firm or nonprofit organization, and is providing experimental, development, or research work under this transaction, Supplier must comply with the requirements of 3 CFR Part 401, "Rights to Inventions Made by nonprofit Organizations and Small Business Firms Under Government Grants, Contracts, and Cooperative Agreements".
2. Clean Air Act. Supplier agrees to comply with all applicable standards, orders or regulations issued pursuant to the Clean Air Act (42 U.S.C. 7401-7671q) and the Federal Water Pollution Control Act as amended (33 U.S.C. 1251-1387). Violations must be reported to the Federal awarding agency and the Regional Office of the Environmental Protection Agency (EPA).
3. Byrd Anti-Lobbying. Supplier certifies that it will not, and has not used Federal appropriated funds to pay any person or organization for influencing or attempting to influence an officer or employee of any agency, a member of Congress, officer or employee of Congress, or an employee of a member of Congress in connection with obtaining any Federal contract, grant or any other award covered by 31 U.S.C. 1352.
4. Procurement of Recovered Materials. If Supplier is a state agency or agency of a political subdivision of a state, then Supplier must comply with section 6002 of the Solid Waste Disposal Act, as amended by the Resource Conservation and Recovery Act.

D. In these provisions, the term "contractor" as used therein will refer to Supplier, and the terms "Government" or "Contracting Officer" as used therein will refer to UC. Where a purchase of items is for fulfillment of a specific U.S. Government prime or subcontract, additional information and/or terms and conditions may be included in an attached supplement. By submitting an invoice to UC, Supplier is representing to UC that, at the time of submission:
   1. Neither Supplier nor its principals are presently debarred, suspended, or proposed for debarment by the U.S. government (see FAR 52.209-6);
   2. Supplier has filed all compliance reports required by the Equal Opportunity clause (see FAR 52.222-22); and
   3. Any Supplier representations to UC about U.S. Small Business Administration or state and local classifications, including but not limited to size standards, ownership, and control, are accurate and complete.
   4. Byrd Anti-Lobbying. Supplier certifies that it will not, and has not used Federal appropriated funds to pay any person or organization for influencing or attempting to influence an officer or employee of any agency, a member of Congress, officer or employee of Congress, or an employee of a member of Congress in connection with obtaining any Federal contract, grant or any other award covered by 31 U.S.C. 1352.

ARTICLE 12 – EQUAL OPPORTUNITY AFFIRMATIVE ACTION

Supplier agrees it will not discriminate against any employee or applicant for employment in violation of the Civil Rights Act of 1964, the Americans with Disabilities Act, the Age Discrimination in Employment Act, and other pertinent federal and state laws and regulations which are designed to promote equal employment opportunity. If applicable, the Equal Opportunity Clauses set forth in 41 C.F.R. parts 60-1.4(a) are incorporated by reference herein. Only if applicable, this Agreement incorporates the requirements of 41 CFR §§601.4(a)(7) and 29 CFR Part 471 Appendix A to Subpart A. In addition, but also only if applicable, Supplier shall abide by the requirements of 41 CFR § 60-741.5(a). These regulations prohibit discrimination against qualified individuals on the basis of disability, and require affirmative action by covered prime contractors and subcontractors to employ and advance in employment qualified individuals with disabilities. With respect to activities occurring in the State of California, Supplier agrees to adhere to the California Fair Employment and Housing Act. Supplier will provide UC on request a breakdown of its labor force by groups as specified by UC, and will discuss with UC its policies and practices relating to its affirmative action programs. Supplier will not maintain or provide facilities for employees at any establishment under its control that are segregated on a basis prohibited by federal law.

ARTICLE 13 – LIENS

Supplier agrees that upon UC's request, Supplier will submit a sworn statement setting forth the work performed or material furnished by sub-suppliers and material men, and the amount due and to become due to each, and that before the final payment called for under the Agreement, will upon UC's request submit to UC a complete set of vouchers showing what payments have been made for such work performed or material furnished. Supplier will promptly notify UC in writing, of any claims, demands, causes of action, liens or suits brought to its attention that arise out of the Agreement. UC will not make final payment until Supplier, if required, delivers to UC a complete release of all liens arising out of the Agreement, or receipts in full in lieu thereof, as UC may require, and if required in either case, an affidavit that as far as it has knowledge or information, the receipts include all the labor and materials for which a lien could be filed; but Supplier may, if any sub-supplier refuses to furnish a release or receipt in full, furnish a bond satisfactory to UC to indemnify it against any claim by lien or otherwise. If any lien or claim remains unsatisfied after all payments are made, Supplier will refund to UC all monies that UC may be compelled to pay in discharging such lien or claim, including all costs and reasonable attorneys' fees.

DocuSign Envelope ID: 8ACC6917-B67C-447B-8477-D50D2789A916

ARTICLE 14 – PREMISES WHERE SERVICES ARE PROVIDED

A. Cleaning Up. Supplier will at all times keep UC premises where the Services are performed and adjoining premises free from accumulations of waste material or rubbish caused by its employees or work of any of its sub-suppliers, and, at the completion of the Services; will remove all rubbish from and about the premises and all its tools, scaffolding, and surplus materials, and will leave the premises "broom clean" or its equivalent, unless more exactly specified. In case of dispute between Supplier and its sub-suppliers as to responsibility for the removal of the rubbish, or if it is not promptly removed, UC may remove the rubbish and charge the cost to Supplier.

B. Environmental, Safety, Health and Fire Protection. Supplier will take all reasonable precautions in providing the Goods and Services to protect the health and safety of UC employees and members of the public and to minimize danger from all hazards to life and property, and will comply with all applicable environmental protection, health, safety, and fire protection regulations and requirements (including reporting requirements). In the event that Supplier fails to comply with such regulations and requirements, UC may, without prejudice to any other legal or contractual rights of UC, issue an order stopping all or any part of the provision of the Goods and/or Services; thereafter a start order for resumption of providing the Goods and/or Services may be issued at UC's discretion. Supplier will not be entitled to make a claim for extension of time or for compensation or damages by reason of or in connection with such stoppage. Supplier will have sole responsibility for the safety of all persons employed by Supplier and its sub-suppliers on UC premises, or any other person who enters upon UC premises for reasons relating to the Agreement. Supplier will at all times maintain good order among its employees and all other persons who come onto UC's premises at Supplier's request and will not engage any unfit or unskilled person to provide the Goods and/or Services. Supplier will confine its employees and all other persons who come onto UC's premises at Supplier's request or for reasons relating to the Agreement and its equipment to that portion of UC's premises where the Services are to be provided or to roads leading to and from such work sites, and to any other area which UC may permit Supplier to use. Supplier will take all reasonable measures and precautions at all times to prevent injuries to or the death of any of its employees or any other person who enters upon UC premises at Supplier's request. Such measures and precautions will include, but will not be limited to, all safeguards and warnings necessary to protect workers and others against any conditions on the premises that could be dangerous and to prevent accidents of any kind whenever the Goods and/or Services are being provided in proximity to any moving or operating machinery, equipment or facilities, whether such machinery, equipment or facilities are the property of or are being operated by, Supplier, its sub-suppliers, UC or other persons. To the extent compliance is required, Supplier will comply with all relevant UC safety rules and regulations when on UC premises.

C. Tobacco-free Campus. UC is a tobacco-free institution. Use of cigarettes, cigars, oral tobacco, electronic cigarettes and all other tobacco products is prohibited on all UC owned or leased sites.

ARTICLE 15 – LIABILITY FOR UC - FURNISHED PROPERTY

Supplier assumes complete liability for any materials UC furnishes to Supplier in connection with the Agreement and Supplier agrees to pay for any UC materials Supplier damages or otherwise is not able to account for to UC's satisfaction. UC furnishing to Supplier any materials in connection with the Agreement will not, unless otherwise expressly provided in writing by UC, be construed to vest title thereto in Supplier.

ARTICLE 16 – COOPERATION

Supplier and its sub-suppliers, if any, will cooperate with UC and other suppliers and will so provide the Services that other cooperating suppliers will not be hindered, delayed or interfered with in the progress of their work, and so that all of such work will be a finished and complete job of its kind.

ARTICLE 17 – ADDITIONAL TERMS APPLICABLE TO THE FURNISHING OF GOODS

The terms in this Article have special application to the furnishing of Goods:

A. Price Decreases. Supplier agrees immediately to notify UC of any price decreases from its suppliers, and to pass through to UC any price decreases.

B. Declared Valuation of Shipments. Except as otherwise provided in the Agreement, all shipments by Supplier under the Agreement for UC's account will be made at the maximum declared value applicable to the lowest transportation rate or classification and the bill of lading will so note.

C. Title. Title to the Goods purchased under the Agreement will pass directly from Supplier to UC at the f.o.b. point shown, or as otherwise specified in the Agreement, subject to UC's right to reject upon inspection.

DocuSign Envelope ID: 8ACC6917-B67C-447B-8477-D50D2789A916

D. Changes. Notwithstanding the terms in Article 34, Amendments, UC may make changes within the general scope of the Agreement in drawings and specifications for specially manufactured Goods, place of delivery, method of shipment or packing of the Agreement by giving advanced notice to Supplier and subsequently confirming such changes in writing. If such changes affect the cost of or the time required for performance of the Agreement, UC and Supplier will agree upon an equitable adjustment in the price and/or delivery terms. Supplier may not make changes without UC's written approval. Any claim of Supplier for an adjustment under the Agreement must be made in writing within thirty (30) days from the date Supplier receives notice of such change unless UC waives this condition in writing. Nothing in the Agreement will excuse Supplier from proceeding with performance of the Agreement as changed hereunder. Supplier may not alter or misbrand, within the meaning of the applicable Federal and State laws, the Goods furnished.

E. Forced, Convict and Indentured Labor. Supplier warrants that to the best their knowledge, and belief, no foreign-made Goods furnished to UC pursuant to the Agreement will be produced in whole or in part by forced labor, convict labor, or indentured labor under penal sanction. If UC determines that Supplier knew or should have known that it was breaching this warranty, UC may, in addition to terminating the Agreement, remove Supplier from consideration for UC contracts for a period not to exceed one year. This warranty is in addition to any applicable warranties in Articles 6 and 11.

F. Export Control. Supplier agrees to provide UC (the contact listed on the Purchase Order) with written notification that identifies the export-controlled Goods and such Goods' export classification if any of the Goods is export-controlled under the International Traffic in Arms Regulations (ITAR) (22 CFR §§ 120-130), the Export Administration Regulations (15 CFR §§ 730-774) 500 or 600 series, or controlled on a military strategic goods list. Supplier agrees to provide UC (the contact listed on the Purchase Order) with written notification if Supplier will be providing information necessary for the operation, installation (including on-site installation), maintenance (checking), repair, overhaul, and refurbishing of the Goods that is beyond a standard user manual (i.e. "Use" technology as defined under the EAR 15 CFR § 772.1), or "Technical Data" (as defined under the ITAR 22 CFR § 120.10).

ARTICLE 18 – CONFLICT OF INTEREST

Supplier affirms that, to the best of Supplier's knowledge, no UC employee who has participated in UC's decision-making concerning the Agreement has an "economic interest" in the Agreement or Supplier. A UC employee's "economic interest" means:

A. An investment worth $2,000 or more in Supplier or its affiliate;
B. A position as director, officer, partner, trustee, employee or manager of Supplier or its affiliate;
C. Receipt during the past 12 months of $500 in income or $440 in gifts from Supplier or its affiliate; or
D. A personal financial benefit from the Agreement in the amount of $250 or more.

In the event of a change in these economic interests, Supplier will provide written notice to UC within thirty (30) days after such change, noting such changes. Supplier will not be in a reporting relationship to a UC employee who is a near relative, nor will a near relative be in a decision making position with respect to Supplier.

ARTICLE 19 – AUDIT REQUIREMENTS

The Agreement, and any pertinent records involving transactions relating to this Agreement, is subject to the examination and audit of the Auditor General of the State of California or Comptroller General of the United States or designated Federal authority for a period of up to five (5) years after final payment under the Agreement. UC, and if the underlying grant, cooperative agreement or federal contract so provides, the other contracting Party or grantor (and if that be the United States or an instrumentality thereof, then the Comptroller General of the United States) will have access to and the right to examine Supplier's pertinent books, documents, papers, and records involving transactions and work related to the Agreement until the expiration of five (5) years after final payment under the Agreement. The examination and audit will be confined to those matters connected with the performance of the Agreement, including the costs of administering the Agreement.

ARTICLE 20 – PROHIBITION ON UNAUTHORIZED USE OR DISCLOSURE OF INSTITUTIONAL INFORMATION

A. Prohibition on Access, Use and Disclosure of Institutional Information. Supplier will not access, use or disclose Institutional Information, other than to carry out the purposes for which UC disclosed the Institutional Information to Supplier, except as required by applicable law, or as otherwise authorized in writing by UC prior to Supplier's disclosure. Supplier shall have the limited right to disclose Institutional Information to Supplier's employees provided that: (i) Supplier shall disclose only such Institutional Information as is necessary for the Supplier to perform its obligations under this Agreement, and (ii) Supplier informs such employees of the obligations governing the access, use and disclosure of Institutional Information prior to Supplier's disclosure. Supplier shall be liable

DocuSign Envelope ID: 8ACC6917-B67C-447B-8477-D50D2789A916

for any breach of this Agreement by its employees. For avoidance of doubt, this provision prohibits Supplier from using for its own benefit Institutional Information and any information derived therefrom. For the avoidance of doubt, the sale of Institutional Information is expressly prohibited.

B. Compliance with Applicable Laws and Industry Best Practices. Supplier agrees to comply with all applicable state, federal, and foreign laws, as well as industry best practices, governing the collection, access, use, disclosure, safeguarding and destruction of Institutional Information. Supplier agrees to protect the privacy and security of Institutional Information according to all applicable laws and industry best practices, and no less rigorously than it protects its own information, but in no case less than reasonable care.

C. Confidential Institutional Information. Supplier agrees to hold UC's Confidential Institutional Information, and any information derived therefrom, in strict confidence. Confidential Institutional Information shall be defined as any Institutional Information which is (i) marked as "Confidential" at the time of disclosure; (ii) if disclosed orally, identified at the time of such oral disclosure as confidential, and reduced to writing as "Confidential" within thirty (30) days of such oral disclosure; and (iii) if not marked as "Confidential," information that would be considered by a reasonable person in the relevant field to be confidential given its content and the circumstances of its disclosure. Confidential Information will not be considered confidential to the extent that: (i) Supplier can demonstrate by written records was known to Supplier prior to the effective date of the Agreement; (ii) is currently in, or in the future enters, the public domain other than through a breach of the Agreement or through other acts or omissions of Supplier; (iii) is obtained lawfully from a third party; or (iv) is disclosed under the California Public Records Act or legal process. For the avoidance of doubt, as applicable to Supplier's Services, Confidential Institutional Information may include any information that identifies or is capable of identifying a specific individual, including but not limited to:

1. Personally identifiable information,
2. Protected Health Information as defined by the Health Insurance Portability and Accountability Act of 1996 (HIPAA) and the HIPAA regulations (including, but not limited to 45 C.F.R. § 160.103),
3. Medical Information as defined by California Civil Code § 56.05,
4. Cardholder data,
5. Student records, or
6. Individual financial information that is subject to laws restricting the use and disclosure of such information, including but not limited to:
   a. Article 1, Section 1 of the California Constitution; the California Information Practices Act (Civil Code § 1798 *et seq.*);
   b. The federal Gramm-Leach-Bliley Act (15 U.S.C. §§ 6801(b) and 6805(b)(2));
   c. The federal Family Educational Rights and Privacy Act (20 U.S.C. § 1232g);
   d. The federal Fair and Accurate Credit Transactions Act (15 U.S.C. § 1601 *et seq.*);
   e. The Fair Credit Reporting Act (15 U.S.C. § 1681 *et seq*), and
   f. Applicable international privacy laws, including, but not limited to the General Data Protection Regulation.

D. Required Disclosures of Institutional Information. If Supplier is required by a court of competent jurisdiction or an administrative body to disclose Institutional Information, Supplier will notify UC in writing immediately upon receiving notice of such requirement and prior to any such disclosure (unless Supplier is prohibited by law from doing so), to give UC an opportunity to oppose or otherwise respond to such disclosure. To the extent Supplier still required to disclose Institutional Information, Supplier will furnish only that portion that is legally required and will exercise all reasonable efforts to obtain reliable assurance that confidential treatment will be afforded to any Confidential Institutional Information.

E. No Offshoring. Supplier's transmission, transportation or storage of Institutional Information outside the United States, or access of Institutional Information from outside the United States, is prohibited except with prior written authorization by UC.

F. Conflict in Terms. UC's Appendix – Data Security, Appendix – BAA, and/or Appendix GDPR will control in the event that one or more appendices is incorporated into the Agreement and conflicts with the provisions of this Article.

G. Acknowledgement. Supplier acknowledges that remedies at law would be inadequate to protect UC against any actual or threatened breach of this Section by Supplier, and, without prejudice to any other rights and remedies otherwise available to UC, Supplier agrees to the granting of injunctive relief in UC's favor without proof of actual damages.

ARTICLE 21 – UC WHISTLEBLOWER POLICY

UC is committed to conducting its affairs in compliance with the law, and has established a process for reporting and investigating suspected improper governmental activities. Please visit http://www.ucop.edu/uc-whistleblower/ for more information.

DocuSign Envelope ID: 8ACC6917-B67C-447B-8477-D50D2789A916

ARTICLE 22 – SUSTAINABLE PROCUREMENT GUIDELINES

Supplier will conduct business using environmentally, socially, and economically sustainable products and services (defined as products and services with a lesser or reduced effect on human health and the environment, and which generate benefits to the University as well as to society and the economy, while remaining within the carrying capacity of the environment), to the maximum possible extent consistent with the Agreement, and with the University of California Sustainable Practices Policy (https://policy.ucop.edu/doc/3100155) and the University of California Sustainable Procurement Guidelines:
(https://www.ucop.edu/procurement-services/_files/sustainableprocurementguidelines.pdf).
In accordance with the University of California Sustainable Practices Policy, Supplier will adhere to the following requirements and standards, as applicable. Supplier acknowledges that failure to comply with any of the sustainability standards and requirements in the Agreement will constitute a material breach of the Agreement and UC will have the right to terminate the Agreement without damage, penalty, cost or further obligation.

A. Sustainability Marketing Standards. Supplier sustainability related claims, where applicable, must meet UC recognized certifications and standards set forth in the UC Sustainable Procurement Guidelines and/or meet the standards of Federal Trade Commission's (FTC) Green Guides.
B. Electronic Transfer of Supplier Information. Suppliers, when interacting with the UC, shall be prohibited from providing hard copies of presentations, marketing material, or other informational materials. Suppliers will be required to present all information in electronic format that is easily transferable to UC staff. Materials may be provided in hard copy or physical format if specifically required or requested by a UC representative.
C. Packaging Requirements. All packaging must be compliant with the Toxics in Packaging Prevention Act (AB 455) and must meet all additional standards and requirements set forth in the UC Sustainable Practices Policy. In addition, UC requires that all packaging meet at least one of the criteria listed below:
    1. Uses bulk packaging;
    2. Uses reusable packaging (e.g. totes reused by delivery service for next delivery);
    3. Uses innovative packaging that reduces the weight of packaging, reduces packaging waste, or utilizes packaging that is a component of the product;
    4. Maximizes recycled content and/or meets or exceeds the minimum post-consumer content level for packaging in the U.S. Environmental Protection Agency Comprehensive Procurement Guidelines;
    5. Uses locally recyclable or certified compostable material.
D. Foodservice Foam Ban. As of 2018, the University no longer allows packaging foam or expanded polystyrene (EPS) for takeaway containers or other food service items, in any University-owned or -operated food service facility.
E. Product Packaging Foam Ban. Beginning January 1st, 2020, the University will prohibit all contracted and non-contracted suppliers from selling or distributing packaging foam (other than that utilized for laboratory supply or medical packaging) to UC campuses. Packaging foam is defined as any open or closed cell, solidified, polymeric foam used for cushioning or packaging, including but not limited to: low-density polyethylene foam, polypropylene foam, polystyrene foam (i.e. expanded polystyrene (EPS)), polyurethane foam, polyethylene foam, polyvinyl chloride (PVC) foam, and microcellular foam. Not included in this ban are easily biodegradable, plant-based foams such as those derived from corn or mushrooms.
F. E-Waste Recycling Requirements. All recyclers of UC electronic equipment must be e-Steward certified by the Basel Action Network (BAN).
G. Hosted and Punch-out Catalog Requirements. Suppliers enabled with eProcurement hosted catalog functionality must clearly identify products with UC-recognized certifications, as defined by the UC Sustainable Procurement Guidelines, in both hosted and punch-out catalog e-procurement environments.

ARTICLE 23 – PATIENT PROTECTION AND AFFORDABLE CARE ACT (PPACA) EMPLOYER SHARED RESPONSIBILITY

If the Services involve Supplier furnishing UC with temporary or supplementary staffing, Supplier warrants that:

A. If Supplier is an Applicable Large Employer (as defined under Treasury Regulation Section 54.4980H-1(a)(4)):
    1. Supplier offers health coverage to its full-time employees who are performing Services for UC;
    2. Supplier's cost of enrolling such employees in Supplier's health plan is factored into the fees for the Services; and
    3. The fees for the Services are higher than what the Services would cost if Supplier did not offer health coverage to such full-time employees.

DocuSign Envelope ID: 8ACC6917-B67C-447B-8477-D50D2789A916

B. If Supplier is not an Applicable Large Employer (as defined above):
   1. Supplier offers group health coverage to its full-time employees who are performing Services for UC and such coverage is considered Minimum Essential Coverage (as defined under Treasury Regulation Section 1-5000A-2) and is Affordable (as defined under Treasury Regulation Section 54.4980H-5(e)); or
   2. Supplier's full-time employees who are performing services for UC have individual coverage and such coverage satisfies the PPACA requirements for mandated individual coverage.

Supplier acknowledges that UC is relying on these warranties to ensure UC's compliance with the PPACA Employer Shared Responsibility provision.

ARTICLE 24 - PREVAILING WAGES

Unless UC notifies Supplier that the Services are not subject to prevailing wage requirements, Supplier will comply, and will ensure that all sub-suppliers comply, with California prevailing wage provisions, including but not limited to those set forth in Labor Code sections 1770, 1771, 1771.1, 1772, 1773, 1773.1, 1774, 1775, 1776, 1777.5, and 1777.6. For purposes of the Agreement, the term "sub-supplier" means a person or firm, of all tiers, that has a contract with Supplier or with a sub-supplier to provide a portion of the Services. The term sub-supplier will not include suppliers, manufacturers, or distributors. Specifically, and not by way of limitation, if apprenticable occupations are involved in providing the Services, Supplier will be responsible for ensuring that Supplier and any sub-suppliers comply with Labor Code Section 1777.5. Supplier and sub-supplier may not provide the Services unless currently registered and qualified to perform public work pursuant to Labor Code Section 1725.5 and 1771.1. Notwithstanding the foregoing provisions, Supplier will be solely responsible for tracking and ensuring proper payment of prevailing wages regardless if Services are partially or wholly subject to prevailing wage requirements. In every instance, Supplier will pay not less than the UC Fair Wage (defined as $13 per hour as of 10/1/15, $14 per hour as of 10/1/16, and $15 per hour as of 10/1/17) for Services being performed at a UC Location (defined as any location owned or leased by UC).

The California Department of Industrial Relations (DIR) has ascertained the general prevailing per diem wage rates in the locality in which the Services are to be provided for each craft, classification, or type of worker required to provide the Services. A copy of the general prevailing per diem wage rates will be on file at each UC Location's procurement office, and will be made available to any interested party upon request. Supplier will post at any job site:

A. Notice of the general prevailing per diem wage rates, and
B. Any other notices required by DIR rule or regulation.

By this reference, such notices are made part of the Agreement. Supplier will pay not less than the prevailing wage rates, as specified in the schedule and any amendments thereto, to all workers employed by Supplier in providing the Services. Supplier will cause all subcontracts to include the provision that all sub-suppliers will pay not less than the prevailing rates to all workers employed by such sub-suppliers in providing the Services. The Services are subject to compliance monitoring and enforcement by the DIR. Supplier will forfeit, as a penalty, not more than $200 for each calendar day or portion thereof for each worker that is paid less than the prevailing rates as determined by the DIR for the work or craft in which the worker is employed for any portion of the Services provided by Supplier or any sub-supplier. The amount of this penalty will be determined pursuant to applicable law. Such forfeiture amounts may be deducted from the amounts due under the Agreement. If there are insufficient funds remaining in the amounts due under the Agreement, Supplier will be liable for any outstanding amount remaining due. Supplier will also pay to any worker who was paid less than the prevailing wage rate for the work or craft for which the worker was employed for any portion of the Services, for each day, or portion thereof, for which the worker was paid less than the specified prevailing per diem wage rate, an amount equal to the difference between the specified prevailing per diem wage rate and the amount which was paid to the worker. Review of any civil wage and penalty assessment will be made pursuant to California Labor Code section 1742.

ARTICLE 25 – FAIR WAGE/FAIR WORK

If the Agreement is for Services that will be performed at one or more UC Locations, does not solely involve furnishing Goods, and are not subject to extramural awards containing sponsor-mandated terms and conditions, Supplier warrants that it is in compliance with applicable federal, state and local working conditions requirements, including but not limited to those set forth in Articles 11, 12 and 14 herein, and that Supplier pays its employees performing the Services no less than the UC Fair Wage. Supplier agrees UC may conduct such UC Fair Wage/Fair Work interim compliance audits as UC reasonably requests, as determined in UC's sole discretion. Supplier agrees to post UC

DocuSign Envelope ID: 8ACC6917-B67C-447B-8477-D50D2789A916

Fair Wage/Fair Work notices, in the form supplied by UC, in public areas (such as break rooms and lunch rooms) frequented by Supplier employees who perform Services.

For Services rendered (actual spend) not subject to prevailing wage requirements in excess of $100,000 in a year (under the Agreement or any combination of agreements for the same service), Supplier will (i) at Supplier's expense, provide an annual independent verification (https://www.ucop.edu/procurement-services/for-suppliers/fwfw-resources-suppliers.html) performed by a licensed public accounting firm (independent accountant) or the Supplier's independent internal audit department (http://na.theiia.org/standards-guidance/topics/Pages/Independence-and-Objectivity.aspx) in compliance with UC's required verification standards and procedures (https://www.ucop.edu/procurement-services/for-suppliers/fwfw-resources-suppliers.html), concerning Supplier's compliance with this provision, and (ii) ensure that in the case of a UC interim audit, its independent accountant/independent internal auditor makes available to UC its UC Fair Wage/Fair Work work papers for the most recent verification period. Supplier agrees to provide UC with a UC Fair Wage/Fair Work verification annually, in a form acceptable to UC, no later than ninety days after the end of the 12-month period in which $100,000 in spend is reached.

The Fair Wage Fair Work annual independent verification requirement does not extend to contracts for professional services or consulting for which pre-certification has been provided to UC (https://www.ucop.edu/procurement-services/for-suppliers/fwfw-resources-suppliers.html). Please see the UC Procurement/Supply Chain Management Policy BUS-43 (https://www.ucop.edu/procurement-services/policies-forms/business-and-finance/index.html) for the definition of professional services and consulting.

ARTICLE 26 – MEDICAL DEVICES

This Article applies when the Goods and/or Services involve UC purchasing or leasing one or more medical devices from Supplier, or when Supplier uses one or more medical devices in providing Goods and/or Services to UC.

Medical Device as used herein will have the meaning provided by the U.S. Food and Drug Administration ("FDA") and means an instrument, apparatus, implement, machine, contrivance, implant, in vitro reagent, or other similar or related article, including a component part, or accessory which is: (i) recognized in the official National Formulary, or the United States Pharmacopoeia, or any supplement to them; (ii) intended for use in the diagnosis of disease or other conditions, or in the cure, mitigation, treatment, or prevention of disease, in humans or other animals, or (iii) intended to affect the structure or any function of the body of humans or other animals, and which does not achieve any of its primary intended purposes through chemical action within or on the body of humans or other animals and which is not dependent upon being metabolized for the achievement of any of its primary intended purposes.

Supplier warrants that prior to UC's purchase or lease of any Medical Device or Supplier's use of any Medical Device in providing Goods and/or Services hereunder, Supplier will: (i) perform security testing and validation for each such Goods and/or Services or Medical Device, as applicable; (ii) perform security scans to detect malware on any software embedded within any Goods and/or Services or Medical Device, as applicable, in order to verify that the software does not contain any known malware; (iii) conduct a vulnerability scan encompassing all ports and fuzz testing; and (iv) provide UC with reports for (i) – (iii). Supplier warrants that any Good or Medical Device is compliant with FDA's most current guidance or regulation for the quality system related to the cybersecurity and the Management of Cybersecurity in Medical Devices, and that Supplier will maintain compliance with any updates to such guidance or regulations.

Throughout Supplier's performance of this Agreement, Supplier will provide UC with reasonably up-to-date patches, firmware and security updates for any Medical Device provided to UC, and any other Medical Device used in the course of providing Services, as applicable. All such patches and other security updates will be made available to UC within thirty (30) days of its commercial release or as otherwise recommended by Supplier or Supplier's sub-supplier, whichever is earlier.

Supplier warrants that all software and installation media not specifically required for any Medical Device used by Supplier or Goods and/or Services delivered to UC under this Agreement as well as files, scripts, messaging services and data will be removed from all such Goods and/or Services or Medical Device following installation, and that all hardware ports and drivers not required for use or operation of such Goods and/or Services or Medical Device will be disabled at time of installation. In addition, Medical Devices must be configured so that only Supplier-approved applications will run on such Medical Devices.

DocuSign Envelope ID: 8ACC6917-B67C-447B-8477-D50D2789A916

Supplier agrees that UC may take any and all actions that it, in its sole discretion, deems necessary to address, mitigate and/or rectify any real or potential security threat, and that no such action, to the extent such action does not compromise device certification, will impact, limit, reduce or negate Supplier's warranties or any of Supplier's other obligations hereunder.

Supplier warrants that any Medical Device provided to UC, and any other Medical Device used in the course of providing such Goods and/or Services, meet and comply with all cyber-security guidance and similar standards promulgated by the FDA and any other applicable regulatory body.

If the Goods and/or Services entail provision or use of a Medical Device, Supplier will provide UC with a completed Manufacturer Disclosure Statement for Medical Device Security (MDS2) form for each such Medical Device before UC is obligated to purchase or lease such Medical Device or prior to Supplier's use of such device in its performance of Services. If Supplier provides an MDS2 form to UC concurrently with its provision of Goods and/or Services, UC will have a reasonable period of time to review such MDS2 form, and if the MDS2 form is unacceptable to UC, then UC in its sole discretion may return the Goods or terminate the Agreement with no further obligation to Supplier.

ARTICLE 27 – FORCE MAJEURE

Neither Party will be liable for delays due to causes beyond the Party's control (including, but not restricted to, war, civil disturbances, earthquakes, fires, floods, epidemics, quarantine restrictions, freight embargoes, and unusually severe weather).

ARTICLE 28 – ASSIGNMENT AND SUBCONTRACTING

Except as to any payment due hereunder, Supplier may not assign or subcontract the Agreement without UC's written consent; provided, however, that Supplier may assign the Agreement to an affiliate upon prior written notice to and approval from UC. In case such consent is given, the assignee or subcontractor will be subject to all of the terms of the Agreement.

ARTICLE 29 – NO THIRD-PARTY RIGHTS

Nothing in the Agreement, express or implied, is intended to make any person or entity that is not a signer to the Agreement a third-party beneficiary of any right created by this Agreement or by operation of law.

ARTICLE 30 – OTHER APPLICABLE LAWS

Any provision required to be included in a contract of this type by any applicable and valid federal, state or local law, ordinance, rule or regulations will be deemed to be incorporated herein.

ARTICLE 31 – NOTICES

A Party must send any notice required to be given under the Agreement by overnight delivery or by certified mail with return receipt requested, to the other Party's representative at the address specified by such Party.

ARTICLE 32 – SEVERABILITY

If a provision of the Agreement becomes, or is determined to be, illegal, invalid, or unenforceable, that will not affect the legality, validity or enforceability of any other provision of the Agreement or of any portion of the invalidated provision that remains legal, valid, or enforceable.

ARTICLE 33 – WAIVER

Waiver or non-enforcement by either Party of a provision of the Agreement will not constitute a waiver or non-enforcement of any other provision or of any subsequent breach of the same or similar provision.

ARTICLE 34 – AMENDMENTS

The Parties may make changes in the Goods and/or Services or otherwise amend the Agreement, but only by a writing signed by both Parties' authorized representatives. In the event there is a Material Change to the Agreement, the parties agree to meet and confer in good faith in order to modify the terms of the Agreement. A Material Change as used herein refers to:

DocuSign Envelope ID: 8ACC6917-B67C-447B-8477-D50D2789A916

A. A change to the scope of Goods and/or Services to be provided by Supplier, as agreed to by UC;
B. A change in the Institutional Information Supplier is required to create, receive, maintain or transmit in performance of the Agreement, such that the Protection Level Classification of such Institutional Information changes;
C. Changes in the status of the parties;
D. Changes in flow down terms from external parties; and
E. Changes in law or regulation applicable to this Agreement.

Each party shall notify the other party upon the occurrence of a Material Change.

ARTICLE 35 – GOVERNING LAW AND VENUE

California law will control the Agreement and any document to which it is appended. The exclusive jurisdiction and venue for any and all actions arising out of or brought under the Agreement is in a state court of competent jurisdiction, situated in the county in the State of California in which the UC Location is located or, where the procurement covers more than one UC Location, the exclusive venue is Alameda County, California.

ARTICLE 36 – ASSISTANCE IN LITIGATION OR ADMINISTRATIVE PROCEEDINGS

Supplier will make itself and its employees, subcontractors, or agents assisting Supplier in the performance of its obligations reasonably available to UC at no cost to UC to testify as witnesses, or otherwise, in the event of investigations, or proceedings against UC, its directors, officers, agents, or employees relating to the Goods or Services.

ARTICLE 37 – SUPPLIER TERMS

Any additional terms that Supplier includes in an order form or similar document will be of no force and effect, unless UC expressly agrees in writing to such terms.

ARTICLE 38 – SURVIVAL CLAUSE

Upon expiration or termination of the Agreement, the following provisions will survive: WARRANTIES; INTELLECTUAL PROPERTY, COPYRIGHT, PATENTS, AND DATA RIGHTS; INDEMNITY AND LIABILITY; USE OF UC NAMES AND TRADEMARKS; LIABILITY FOR UC-FURNISHED PROPERTY; COOPERATION; TERMS APPLICABLE TO THE FURNISHING OF GOODS; AUDIT REQUIREMENTS; PROHIBITION ON UNAUTHORIZED USE OR DISCLOSURE OF INSTITUTIONAL INFORMATION; GOVERNING LAW AND VENUE, and, to the extent incorporated into the Agreement, the terms of the APPENDIX–DATA SECURITY, APPENDIX--BAA, and/or APPENDIX-GDPR.

ARTICLE 39 – CONTRACTING FOR COVERED SERVICES

Covered Services, for the purpose of this Agreement, are defined as work customarily performed by bargaining unit employees at the University in the categories of services described in Regents Policy 5402, and American Federation of State, County, and Municipal Employees (AFSCME) Collective Bargaining Agreement Article 5. Covered Services include, but are not necessarily limited to, the following services: cleaning, custodial, janitorial, or housekeeping services; food services; laundry services; grounds keeping; building maintenance (excluding skilled crafts); transportation and parking services; and security services.

Unless UC notifies Supplier that the Services are not Covered Services, Supplier warrants that it is in compliance with applicable federal, state and local working conditions requirements, including but not limited to those set forth in in other Articles of the Agreement. In accordance with Regents Policy 5402 and AFSCME Collective Bargaining Agreement Article 5, Supplier also warrants that it pays its employees performing the Covered Services at UC locations the equivalent value of the wages and benefits – as determined in the Wage and Benefit Parity Appendix – received by UC employees providing similar services at the same, or nearest UC location.

Supplier agrees UC may conduct such compliance audits as UC reasonably requests, and determined at UC's sole discretion. Supplier agrees to post UC Contracting for Covered Services notices, in the template supplied by UC, in a prominent and accessible place (such as break rooms and lunch rooms) where it may be easily seen by workers who perform Covered Services. The term "Supplier" includes Supplier and its Sub-Suppliers at any tier. Supplier also agrees to:

DocuSign Envelope ID: 8ACC6917-B67C-447B-8477-D50D2789A916

(a) upon UC's request, provide verification of an independent audit performed by Supplier's independent auditor or independent internal audit department (http://na.theiia.org/standards-guidance/topics/Pages/Independence-and-Objectivity.aspx) and at Supplier's expense; and

(b) ensure that, in the case of a UC interim audit, Supplier's auditor makes available to UC its Contracting for Covered Services work papers for the most recently audited time period. Supplier agrees to provide UC requested verification, in a form acceptable to UC, no later than ninety days after receiving UC's request.

DocuSign Envelope ID: 8ACC6917-B67C-447B-8477-D50D2789A916

ARTICLE 1. PURPOSE AND INTRODUCTION

A. In the course of providing the Goods and/or Services contemplated by the Agreement, Supplier may gain access to the University of California's (UC) Institutional Information and/or IT Resources (both defined below). In such an event, UC and Supplier desire to appropriately protect Institutional Information and IT Resources. The purpose of this Appendix-Data Security is to specify Supplier's cybersecurity and risk management responsibilities when Supplier has access to Institutional Information and/or IT Resources.

B. Any capitalized terms used here have the meaning ascribed to such terms as set forth in the Agreement or Incorporated Documents.

C. Supplier must provide commercially acceptable cybersecurity and cyber risk management to protect Institutional Information and/or IT Resources. This must include, but is not limited to the Supplier:

1. Developing and documenting a plan that protects Institutional Information and IT Resources.
   - Supplier must responsibly execute this plan.
   - Supplier's approach must conform to a recognized cybersecurity framework designed for that purpose.[1]
   - Supplier's information security plan must be supported by a third-party review or certification. Supplier may only use an alternative to a third-party review if approved by the responsible UC Information Security Officer.
2. Conducting an accurate and thorough assessment of the potential risks to and vulnerabilities of the security of the Institutional Information and/or IT Resources. Supplier must mitigate anticipated risks effectively. This includes implementing commercially acceptable security policies, procedures, and practices that protect Institutional Information and/or IT Resources.
3. Updating its plan to effectively address new cybersecurity risks.
4. Complying with pertinent contractual and regulatory responsibilities.
5. Providing UC with evidence of compliance with Supplier's information security plan.
6. Keeping UC informed with timely updates on risks, vulnerabilities, Security Incidents, and Breaches.
7. Keeping UC informed of any measures UC must perform to ensure the security of Institutional Information and IT Resources.

[1] Examples include the latest versions of PCI DSS, NIST CSF, CIS Critical Security Controls, ISO 27002, NIST SP 800-53 and NIST SP 800-171.

DocuSign Envelope ID: 8ACC6917-B67C-447B-8477-D50D2789A916

D. If, in the course of providing the Goods and/or Services under the Agreement, Supplier engages in transactions with UC affiliated individuals (including but not limited to: students, staff, faculty, customers, patients, guests, volunteers, visitors, research subjects, etc.), as a benefit and result of the Agreement, Supplier must treat any data about UC affiliated individuals that Supplier creates, receives, and/or collects in the course of those transactions with the same level of privacy and security protections and standards as required of Institutional Information by this Appendix.

E. Supplier agrees to be bound by the obligations set forth in this Appendix. To the extent applicable, Supplier also agrees to impose, by written contract, the same terms and conditions contained in this Appendix on any sub-supplier retained by Supplier that are specifically involved in data security and privacy, to provide or assist in providing the Goods and/or Services to UC.

F. To the extent that a requirement of this Appendix conflicts with those of any other UC Agreement or Incorporated Document, the most stringent requirement (including but not limited to: least risk to UC, shortest time, best practice, etc.) will apply.

ARTICLE 2. DEFINED TERMS

A. "Breach" means: (1) Any disclosure of Institutional Information to an unauthorized party or in an unlawful manner; (2) Unauthorized or unlawful acquisition of information that compromises the security, confidentiality, or integrity of Institutional Information and/or IT Resources; or (3) The acquisition, access, use, or disclosure of protected health information (PHI) or medical information in a manner not permitted under the Health Insurance Portability and Accountability Act (HIPAA) or California law.

B. "Illicit Code" means: (1) Any code UC would not reasonably expect to be present or operating; (2) Hidden software or functionality with adverse or undesired actions or consequences; (3) Code that replicates or transmits Institutional Information or activates operating systems or other similar services without the express knowledge and approval of UC; (4) Code that alters, damages, or erases any Institutional Information or software without the express knowledge and approval of UC; or (5) Code or apparatus that functions in any way as a: key lock, node lock, time-out, "back door," "trap door," "booby trap," "dead drop device," "data scrambling device," or other function, regardless of how it is implemented, which is intended to alter or restrict the use of or access to any Institutional Information and/or IT Resources.

C. "Institutional Information" means: Any information or data created, received, and/or collected by UC or on its behalf, including but not limited to: application logs, metadata, and data derived from such data.

D. "IT Resource" means: IT infrastructure, cloud services, software, and/or hardware with computing and/or networking capability that is Supplier owned/managed or UC-owned, or a personally owned device that stores Institutional Information, is connected to UC systems, is connected to UC networks, or is used for UC business. IT Resources include, but are not limited to: personal and mobile computing systems and devices,

DocuSign Envelope ID: 8ACC6917-B67C-447B-8477-D50D2789A916

mobile phones, printers, network devices, industrial control systems (including but not limited to: SCADA, PLCs, DPC, Operational Technology, etc.), access control systems, digital video monitoring systems, data storage systems, data processing systems, backup systems, electronic and physical media, biometric and access tokens, Internet of Things (IoT), or any other device that connects to any UC network.

E. "Major Change" means: The implementation of a change that could have an effect on the security of an IT Resource or Institutional Information. The scope includes changes to architectures, processes, tools, metrics, and documentation, as well as changes to IT services and other configuration items. These include changes related to:

1. Technology upgrades or migrations.
2. Responses to Security Incidents.
3. Modifications of scope (data elements, features, location of Institutional Information, etc.).
4. Regulatory guidance.
5. Law and legal regulations.
6. Responses to risk assessments.
7. Addressing vulnerabilities.
8. Material updates or shifts in technologies used by Supplier.

F. "Security Incident" means: (1) A material compromise of the confidentiality, integrity, or availability of Institutional Information; (2) A single event or a series of unwanted or unexpected events that has a significant probability of compromising UC business operations or threatening Institutional Information and/or IT Resources; (3) Any event involving a cyber intrusion; or (4) A material failure of Supplier's administrative, technical, or physical controls that resulted or could have resulted in an adverse impact to the confidentiality, integrity, or availability of Institutional Information or IT Resources.

ARTICLE 3. ACCESS TO INSTITUTIONAL INFORMATION AND IT RESOURCES

A. Supplier must limit its access to, use of, and disclosure of Institutional Information and IT Resources to the least invasive degree necessary required to provide the Goods and/or Services.

1. Supplier may not access or use Institutional Information and IT Resources for any purpose except to provide the Goods and/or Services.
2. For the avoidance of doubt, Supplier may not access, use, or disclose Institutional Information and IT Resources outside the scope of the Agreement for purposes of, including but not limited to: marketing, advertising, research, sale, or licensing unless expressly approved in writing by UC.

B. In the event that Goods and/or Services include the review of a specific Security Incident or a threat to or anomaly in Institutional Information or IT Resources, Supplier must limit inspection to the least invasive degree necessary required to perform the investigation.

DocuSign Envelope ID: 8ACC6917-B67C-447B-8477-D50D2789A916

ARTICLE 4. SUPPLIER'S INFORMATION SECURITY PLAN AND RESPONSIBILITIES

A. Supplier acknowledges that UC must comply with information security standards as required by law, regulation, and regulatory guidance, as well as by UC's internal security program that protects Institutional Information and IT Resources.

B. Supplier must establish, maintain, comply with, and responsibly execute its information security plan.

C. Supplier's initial information security plan is attached as Exhibit 2 and incorporated by reference.

D. Updates to Exhibit 2 will occur as follows:

1. On an annual basis, Supplier will review its information security plan, update it as needed, and submit it upon written request by UC.

2. In the event of a Major Change, Supplier will review its information security plan, update it as needed, and submit it to UC as detailed herein.

E. If Supplier makes any material modifications to its information security plan that will affect the security of Institutional Information and IT Resources, Supplier must notify UC within seventy-two (72) calendar hours and identify the changes.

F. Supplier's Information Security Plan must:

1. Ensure the security (including but not limited to: confidentiality, integrity, and availability) of Institutional Information and IT Resources through the use and maintenance of appropriate administrative, technical, and physical controls;

2. Protect against any reasonably anticipated threats or hazards to Institutional Information and IT Resources;

3. Address the risks associated with Supplier having access to Institutional Information and IT Resources;

4. Comply with applicable regulations and/or external obligations listed in Exhibit 1;

5. Comply with all applicable legal and regulatory requirements for data protection, security, and privacy;

6. Clearly document the cybersecurity responsibilities of each party;

7. Follow UC records retention requirements outlined in the Statement of Work (SOW) or in UC's Terms and Conditions;

8. Prevent the sharing of passwords or authentication secrets that provide access to Institutional Information and/or IT Resources;

9. Prevent the use of passphrases (passwords) or other authentication secrets that are common across customers or multiple unrelated UC sites or units;

10. Prevent unauthorized access to Institutional Information and IT Resources;

11. Prevent unauthorized changes to IT Resources;

12. Prevent the reduction, removal, or turning off of any security control without express written approval from UC;

DocuSign Envelope ID: 8ACC6917-B67C-447B-8477-D50D2789A916

13. Prevent the creation of new Supplier accounts to access Institutional Information and IT Resources without express written approval from UC;

14. Prevent the storing, harvesting, or passing through of UC credentials (username, password, authentication secret, or other factor); and

15. Prevent the use or copying of Institutional Information for any purpose not authorized under the Agreement or any associated Statement of Work (SOW).

ARTICLE 5. REQUESTS FROM UC AND EVIDENCE OF COMPLIANCE

A. Supplier must provide UC with evidence that demonstrates to UC's reasonable satisfaction Supplier's adherence to its information security plan (including but not limited to: third-party report, attestation signed by an authorized individual, attestation of compliance by a qualified assessor, or a mutually agreed upon equivalent) upon execution of the Agreement, upon reasonable request (including but not limited to: annually, after Major Changes, and/or as a result of a Security Incident), or as required by any applicable regulatory or governmental authority.

B. Supplier must respond to UC's reasonable questions related to cybersecurity controls, Security Incidents, or Major Changes, newly published vulnerabilities, and/or risk assessments within ten (10) business days.

C. UC may request and perform a security audit using a qualified third party or a mutually agreed upon alternative annually or as a result of a Breach.

ARTICLE 6. NOTIFICATION OF MAJOR CHANGES AND VULNERABILITY DISCLOSURES

A. Within twenty (20) business days, Supplier must notify UC regarding changes in Supplier's security posture or IT infrastructure. Such notices must occur:

1. When Major Changes happen.
2. When Supplier becomes aware of a vulnerability that warrants a CVE[2] rating of "High" or "Critical," based on the latest CVE version, for which a patch is not yet available or for which Supplier will delay application of an available patch.

B. Supplier must use commercially acceptable efforts to remediate, within twenty (20) business days, any vulnerability rated as CVE High or Critical.

C. In response to Major Changes, Supplier must update its information security plan no later than fifteen (15) days into the next calendar quarter and must provide updated evidence of compliance with the information security plan.

[2] Common Vulnerabilities and Exposures (CVE) is a dictionary-type list of standardized names for vulnerabilities and other information related to security exposures maintained by The MITRE Corporation. CVE aims to standardize the names for all publicly known vulnerabilities and security exposures. The goal of CVE is to make it easier to share data across separate vulnerability databases and security tools. The CVE list can be found at: cve.mitre.org

DocuSign Envelope ID: 8ACC6917-B67C-447B-8477-D50D2789A916

ARTICLE 7. RETURN AND DISPOSAL OF INSTITUTIONAL INFORMATION

A. Within thirty (30) calendar days of the termination, cancellation, expiration, or other conclusion of the Agreement, Supplier must return all Institutional Information to UC and then dispose of the Institutional Information in possession of Supplier as detailed herein. This provision also applies to all Institutional Information that is in the possession of sub-suppliers or agents of Supplier.

B. Such disposal will be accomplished using the methods described in UC's Institutional Information Disposal Standard (https://security.ucop.edu/policies/institutional-information-disposal.html) or an alternative approved by UC.

C. Upon request, Supplier will certify in writing to UC that such return and/or disposal has been completed.

D. If Supplier believes that return and/or disposal of Institutional Information is technically impossible or impractical, Supplier must provide UC with a written statement explaining the reason for this conclusion. If UC determines that return and/or disposal is technically impossible or impractical, Supplier will continue to protect the Institutional Information in accordance with the terms of this Appendix for as long as the Institutional Information is in Supplier's possession.

ARTICLE 8. NOTIFICATION OF CORRESPONDENCE CONCERNING INSTITUTIONAL INFORMATION

A. Supplier agrees to notify UC promptly, both orally and in writing, but in no event more than seventy-two (72) calendar hours after Supplier receives correspondence or a complaint that relates to a regulation, contractual obligation, Breach, or material risk concerning Institutional Information. For purposes of this Article 8.A, a correspondence or complaint may include, but is not limited to, any communication that originates from law enforcement, regulatory or governmental agencies, government investigators, corporations, or an individual, but excludes normal customer service correspondence or inquiries.

ARTICLE 9. COORDINATING, REPORTING, AND RESPONDING TO BREACHES AND SECURITY INCIDENTS

A. Reporting of Breach or Security Incident: If Supplier reasonably suspects or confirms a Breach and/or a Security Incident impacting Institutional Information and/or IT Resources, Supplier must promptly notify UC both orally and in writing using the contacts in the Agreement. Supplier must provide such notifications no later than seventy-two (72) calendar hours after the initial suspicion of a Security Incident and/or Breach and (2) seventy-two (72) calendar hours after the initial confirmation of a Security Incident and/or Breach, if Supplier is able to make such a confirmation. Supplier's notification must identify:

1. Contacts for both technical and management coordination;

DocuSign Envelope ID: 8ACC6917-B67C-447B-8477-D50D2789A916

2. Escalation and identifying information, such as ticket numbers, system identifiers, etc.;
3. The nature of the Breach and/or Security Incident;
4. The Institutional Information and/or IT Resources affected;
5. What Supplier has done or will do to mitigate any deleterious effect; and
6. What corrective action Supplier has taken or will take to prevent future Security Incidents.

B. Supplier will provide other non-proprietary information as reasonably requested by UC.

C. In the event of a suspected Breach and/or Security Incident, Supplier will keep UC informed regularly of the progress of its investigation until the incident is resolved.

D. Coordination of Breach Response or Security Incident Activities: Supplier will fully cooperate with UC's investigation of any Breach and/or Security Incident involving Supplier and/or Goods and/or Services. Supplier's full cooperation will include, but not be limited to, Supplier:

1. Promptly preserving any potential forensic evidence relating to the Breach and/or Security Incident;
2. Remedying the Breach and/or Security Incident as quickly as circumstances permit;
3. Promptly, but no more than seventy two (72) calendar hours after the discovery of Breach and/or Security Incident, designating a contact person to whom UC will direct inquiries and who will communicate Supplier responses to UC inquiries;
4. As rapidly as circumstances permit, assigning/using appropriate resources to remedy, investigate, and document the Breach and/or Security Incident, to restore UC service(s) as directed by UC, and undertake appropriate response activities;
5. Providing status reports to UC regarding Breach and Security Incident response activities, either on a daily basis or a frequency approved by UC;
6. Coordinating all media, law enforcement, or other Breach and/or Security Incident notifications with UC in advance of such notification(s), unless expressly prohibited by law;
7. Ensuring that knowledgeable Supplier employees are available with reasonable notice, if needed, to participate in UC and Supplier initiated meetings and/or conference calls regarding the Breach and/or Security Incident; and
8. Ensuring that knowledgeable Supplier employees and agents participate in after-action analysis, including root cause analysis and preventive action planning.

E. Breaches and Security Incidents – Corrective And Preventive Action: As a result of a Breach and/or Security Incident impacting Institutional Information and/or IT Resources, and upon UC's request, Supplier must prepare a report detailing corrective and preventive actions. The report must include:

DocuSign Envelope ID: 8ACC6917-B67C-447B-8477-D50D2789A916

1. A mutually agreed upon timeline for the corrective and preventive actions based on the nature of the Breach and/or Security Incident;
2. Identification and description of the root causes; and
3. Precise steps Supplier will take to address the failures in the underlying administrative, technical, and/or physical controls to mitigate damages and future cyber risk.

F. Costs: Supplier must reimburse UC for reasonable costs related to responding to Breaches impacting Institutional Information and IT Resources caused by Supplier. This includes all costs associated with notice and/or remediation of the Breach.

G. Grounds for Termination: Any Breach may be grounds for termination of the Agreement by UC. Agreement obligations to secure, dispose, and report continue through the resolution of the Breach and/or Security Incident.

ARTICLE 10. ILLICIT CODE WARRANTY

A. Supplier represents and warrants that the Goods and/or Services do not contain Illicit Code.

B. To the extent that any Goods and/or Services have Illicit Code written into them, Supplier will be in breach of this Agreement, and no cure period will apply.

C. Supplier agrees, in order to protect UC from damages that may be intentionally or unintentionally caused by the introduction of Illicit Code, to promptly isolate or otherwise secure and then return Institutional Information and/or IT Resources.

D. Supplier acknowledges that it does not have any right to electronically hold Institutional Information or assert any claim against UC by withholding the Goods and/or Services using Illicit Code.

E. Should Supplier learn of the presence of Illicit Code, Supplier will promptly provide UC with written notice explaining the scope and associated risk.

F. Supplier represents and warrants that it will take commercially reasonable steps to promptly remove Illicit Code.

G. Supplier represents and warrants that even if Illicit Code is unintentionally installed via any method, Supplier will never utilize the Illicit Code.

H. This provision does not relate to malware or viruses that attack the running IT Resource. These are covered under ARTICLE 9 - COORDINATING, REPORTING, AND RESPONDING TO BREACHES AND SECURITY INCIDENTS.

ARTICLE 11. BACKGROUND CHECKS

A. Before Supplier's employee, sub-supplier, or agent may access Institutional Information and/or IT Resources classified at Protection Level 3 or Protection Level 4[3], Supplier must conduct a thorough and pertinent background check. Supplier must evaluate the results prior to granting access in order to assure that there is no indication

[3] See Exhibit 1.

DocuSign Envelope ID: 8ACC6917-B67C-447B-8477-D50D2789A916

that the employee, sub-supplier, or agent presents a risk to Institutional Information and IT Resources.

B. Supplier must retain each employee's, sub-supplier's, or agent's background check documentation for a period of three (3) years following the termination of the Agreement.

Supplier will comply with all applicable laws and regulations. RVC

DocuSign Envelope ID: 8ACC6917-B67C-447B-8477-D50D2789A916

Exhibit 1 – Institutional Information

1. Protection Level Classification[4]:

☐ Protection Level 1

X Protection Level 2

☐ Protection Level 3

☐ Protection Level 4

Explanation:
The Protection Level determines the applicable cyber security insurance requirement in the Terms and Conditions.

2. Institutional Information data element descriptors:

Select all data types that apply:

A. ☐ Animal Research Data.
B. ☐ Controlled Technical Information (CTI).
C. ☐ Controlled Unclassified Information (CUI) – 800-171/NARA.
D. ☐ Defense Department: Covered Defense Information (CDI).
E. ☐ Federal Acquisition Regulations (FARS/DFAR) other than CUI.
F. ☒ GDPR personal data.
G. ☐ GDPR special data.
H. ☐ Health data – other identifiable medical data not covered by HIPAA. (Including but not limited to: occupational health, special accommodation, or services qualification, etc.)
I. ☐ Health Records subject to HIPAA Privacy or Security Rule (PHI).
J. ☐ Human Subject Research Data.
   1. ☐ Identified.
   2. ☐ Anonymized.
K. ☐ Intellectual property (IP), such as patents, copyright, or trade secrets.
L. ☐ ITAR/EAR-controlled data.
M. ☒ Payment card data (PCI, PCI DSS).
N. ☐ Personally identifiable information – PII.
O. ☐ Student data, whether or not subject to FERPA.
P. ☐ Other: _____
Q. ☐ Other: _____

[4] For reference see: https://security.ucop.edu/policies/institutional-information-and-it-resource-classification.html

DocuSign Envelope ID: 8ACC6917-B67C-447B-8477-D50D2789A916

R. ☐ Other: _____

S. ☐ Other: _____

3. Institutional Information Regulation or Contract Requirements:
Select all regulations or external obligations that apply to inform UC and the Supplier of obligations related to this Appendix:

Privacy (* indicates data security requirements are also present)

A. ☐ California Confidentiality of Medical Information Act (CMIA) *.
B. ☒ California Consumer Privacy Act (CCPA).
C. ☐ California Information Practices Act (IPA).
D. ☒ European Union General Data Protection Regulation (GDPR)*.
E. ☐ Family Educational Rights and Privacy Act (FERPA) *.
F. ☐ Federal Policy for the Protection of Human Subjects ("Common Rule").
G. ☐ Genetic Information Nondiscrimination Act (GINA).
H. ☐ Gramm-Leach-Bliley Act (GLBA) (Student Financial Aid) *.
I. ☐ Health Insurance Portability and Accountability Act/Health Information Technology for Economic and Clinical Health Act (HIPAA/HITECH) *.
J. ☐ Substance Abuse and Mental Health Services Administration SAMHSA (CFR 42 Part 2).
K. ☐ The Fair and Accurate Credit Transaction Act (FACTA).
L. ☐ The Fair Credit Reporting Act (FCRA).

Data Security

M. ☐ Chemical Facility Anti-Terrorism Standards (CFATS).
N. ☐ Defense Federal Acquisition Regulations (DFARS).
O. ☐ Export Administration Regulations (EAR).
P. ☐ Federal Acquisition Regulations (FARS).
Q. ☐ Federal Information Security Modernization Act (FISMA).
R. ☐ International Traffic in Arms Regulations (ITAR).
S. ☒ Payment card data (PCI, PCI DSS).
T. ☐ Toxic Substances Control Act (TSCA).
U. ☐ Other: _____
V. ☐ Other: _____
W. ☐ Other: _____
X. ☐ Other: _____

DocuSign Envelope ID: 8ACC6917-B67C-447B-8477-D50D2789A916

Exhibit 2
Supplier's Initial Information Security Plan

[Supplier to provide and update per the Appendix DS requirements.]

See page 40 of attached Home Depot Responsibility Report
also found online at cloud.3dissue.net/17127/17182/17296/18142/index.html

DocuSign Envelope ID: 8ACC6917-B67C-447B-8477-D50D2789A916

UNIVERSITY
OF
CALIFORNIA

Appendix- Electronic Commerce

This Electronic Commerce Appendix specifies the electronic commerce requirements applicable to Supplier in providing the Goods and/or Services.

SECTION 1 - GENERAL TERMS

Each UC Location offers an electronic web-based purchasing and catalog system to facilitate the purchase of Goods and/or Services from UC suppliers. UC Locations' eProcurement systems currently are provided by multiple service providers. Eight of the ten UC campuses utilize the same platform but may require separate implementations, as will the remaining campuses and/or Medical Centers. This Appendix sets forth the terms and conditions that will govern Supplier's sale of Goods and/or Services through UC's eProcurement systems.

SECTION 2 - DEFINITIONS

Catalog(s) refers to the list of detailed product information, agreement pricing, manufacturer part numbers and/or service descriptions relating to the Goods and/or Services to be offered either as a Punch-out Catalog, a Hosted Catalog or in a combination. This may include the creation of multiple Hosted Catalogs.

eProcurement and eCommerce are used interchangeably to mean UC's electronic web-based purchasing and catalog systems. Each UC location has a branded eProcurement site.

Go Live Date means the date on which a Catalog will be active.

Hosted Catalog means a Catalog that is a properly formatted computer file supplied to all UC Locations through the Locations' respective eProcurement systems.

Order means a purchase order for Goods and/or Services placed by a User through an eProcurement system.

Order Data means all data and information relating to Orders, including, without limitation, the specifics of a given transaction.

Punch-out Catalog means a Catalog hosted by Supplier on Supplier's Site. Users may access this Punch-out Catalog via an Internet link provided by Supplier to UC that redirects a User from the Location's eProcurement system to Supplier Site.

Supplier Mark means Supplier's name, trade name and/or trademarks, service mark, or any derivation thereof.

Supplier Site means an internet site operated and maintained by Supplier that has been made subject to this Appendix.

UC Mark means UC's name, trade name and/or trademarks, service marks, or any derivation thereof.

User means an individual authorized by a UC location to use an eProcurement system.

SECTION 3 – RIGHT TO USE

UC grants to Supplier the right to sell Goods and/or Services to UC through the eProcurement systems, subject to the terms of this agreement. Supplier will be responsible for any cost of operation or dispute with regard to its interface with UC's eProcurement systems.

SECTION 4 – e-PROCUREMENT SYSTEM RESPONSIBILITIES; MAINTENANCE OF CATALOG(S); LICENSE

(a) e-Procurement System Responsibilities.
Except as otherwise set forth herein, each party will be responsible, at its own expense, for: (i) developing, operating and maintaining its relevant system(s); (ii) acquiring and maintaining its server hardware and software (or obtaining third-party hosting services) for its relevant system(s); and (iii) maintaining Internet connectivity.

The supplier will enable its catalog with any UC location that requests one, as long as it is not out of the scope of the terms of the agreement or this appendix. The parties agree to electronically link the functionality of their respective systems, using commercially reasonable efforts.

Purchase Order and Invoice/Credit Memo Data will be transmitted between the systems according to the appropriate method for each University location, cXML, xCBL or EDI standards being preferred. Other methods of PO or Invoice/Credit Memo transmission will only be allowed at the discretion of each University location.

A supplier's Punch-out site (if applicable) will permit: (a) Users to access the Supplier Site when a User selects the Punch-out Catalog; (b) Supplier site to send back user selected items to Location's eProcurement system; (c) User to create an Order through the Location's eProcurement system; and (d) UC eProcurement systems to forward an Order to Supplier for confirmation and Order processing along with Order status inquiry.

Supplier must be able to accommodate orders and invoices for multiple UC locations sharing a single eProcurement platform. Supplier must be able to identify the Punch-out session and transmitted PO as being from the individual locations. If providing a Punch-out catalog, Supplier must be able to accommodate multiple UC locations on a single platform using a single Punch-out site, unless requested otherwise by UC.

(b) Maintenance of Hosted and Punch-out Catalogs.
Supplier will provide its Catalog(s) to UC in a file format that will interface seamlessly with UC's eProcurement systems. These Catalog files will be in compliance with each UC Location's eProcurement system.

UC makes no guarantee of a Go Live Schedule for establishment of a new catalog Systemwide, as each Location is a separate enablement and subject to resource availability. Timelines will be estimated and adjusted by UC as needed for concurrent implementations.

For Hosted Catalogs, Supplier must provide UC with updated versions of the Catalog file with, at a minimum, full descriptions and images that Supplier currently utilizes for items offered in its proprietary websites and Punch-out Catalogs. The parties will update each other regarding eCommerce specifications as needed from time to time.

Supplier must notify UC's Contract Administrator at least three (3) weeks in advance of the proposed Go Live Date if it will be requesting additions, deletions, or modifications to the Catalogs. After such advance notification, Supplier must provide UC with Catalog files containing the requested additions, deletions, or modifications with no less than the lead time specified in Section 10 of this appendix. In addition, for price file updates with a mutually agreed upon activation of January 1, Supplier must submit proposed files at least five (5) weeks prior to the first working day in January. Upon UC's approval of the new Catalog file, UC and Supplier will confirm the Go Live Date; the updated version of the Catalog file will be made effective on that Go Live date. If UC rejects a Catalog more than once because it does not meet UC's acceptance criteria, the Contract Administrator will suspend Supplier's price/content change until the date of Supplier's next acceptable contracted change.

If there is a conflict between a price in a Hosted Catalog and a Punch-out Catalog, UC will be invoiced at the lower price. Supplier must notify UC in advance when substituting items, changing SKU numbers or changing the number of items in a package in any Catalog.

Content in Supplier catalog is limited to the categories specified in this agreement, with additional categories allowed at UC's discretion. Supplier agrees that UC may block Catalog items at the category and/or SKU level.

The University will require Supplier to clearly identify products as Hazardous Materials, Radioactive, and Controlled Substances in the Supplier's catalog, whether Hosted or Punch-out. For Punch-out the identifier will be returned to the cart of the Location's eProcurement system, in a manner/field acceptable to the Location.

The University will require Supplier to clearly identify products with UC-recognized sustainability/green certifications in both hosted and Punch-out catalogs. UC's Contract Administrator will work with Supplier to ensure that contract items that meet the UC criteria for Green/Sustainable products will be prioritized in all product searches. Products that do not meet UC's minimum criteria requirements may be blocked in all hosted catalogs and Punch-out catalogs at UC's discretion.

Supplier is responsible for providing UC with Catalogs that contain accurate pricing and data in accordance with the Agreement. If UC determines there are errors in the pricing or data attributes of a Catalog, UC will notify Supplier of those errors in writing and reject the Catalog. Supplier will have no more than ten (10) business days to review and correct the errors.

(c) License.
Supplier hereby grants to UC, at no additional cost, a limited, non-exclusive, royalty-free right to link to and access the Supplier Site from the eProcurement sites, subject to the terms and conditions herein and solely for the purpose of permitting Users to access the Services. All Supplier Marks will remain the sole property of Supplier.

(d) Accessibility Requirements.
Supplier agrees that Supplier will make available Goods/Services accessible to people with disabilities and conform to the technical requirements of the relevant Revised Standards of Section 508 of the federal Rehabilitation Act. In addition, Supplier warrants that:

i. Any catalog content provided to UC will comply with the accessibility requirements of WCAG 2.0AA.
ii. Supplier will promptly respond to and resolve any complaint regarding accessibility of any catalog content provided to UC.

SECTION 5 – USER SUPPORT

(a) UC Duties. Each UC Location will provide its Users with initial contact and system support assistance on all functionality and use issues for eProcurement (including links to the Supplier Site). When known, UC will promptly notify Supplier of any such issues relating to the Catalog, the Supplier Site, and/or other Supplier materials/systems.

(b) Supplier Duties. Supplier will provide all customer support relating to the Catalog, Supplier Goods and/or Services, Invoicing/Payment/Credits, and Supplier Sites in a manner consistent with the customer support that Supplier provides to other customers, and at least as good as the customer support that Supplier provides to customers who are purchasing through any other means.

SECTION 6 – PROPRIETARY RIGHTS

UC's Terms and Conditions of Purchase contains provisions regarding the parties' rights and responsibilities with respect to intellectual property relating to the Goods and Services. Without altering those provisions, the parties additionally agree as follows: UC may require Supplier to "brand" Supplier's Punch-out Catalog with one or more UC Marks. If UC requires Supplier to utilize one or more UC Marks on Supplier's Punch-out Catalog, UC will provide the appropriate artwork and such artwork will be deemed to have been provided with a limited, non-exclusive, non-sub-

licensable right for Supplier to use it solely for the purpose of a UC-branded Punch-out Catalog hosted by Supplier and subject to the following terms:

(i) Supplier may not make any additional use of the UC Marks without UC's prior written approval.

Supplier's use of the UC Marks in the Punch-out Catalog must acknowledge UC's ownership of the UC Marks. Supplier will include all notices and legends with respect to UC trademarks, trade names, or copyrights as may be required by applicable trademark and copyright laws or which may be reasonably requested by UC. Supplier agrees not to claim any title to UC Marks or any right to use UC Marks except as permitted by this Appendix. Upon termination of this Appendix or the Agreement, all rights to UC Marks conveyed by UC to Supplier will cease and Supplier will destroy or return to UC all media with UC Marks. UC specifically reserves any and all rights to UC Marks not specifically granted to Supplier.

Supplier grants to UC the right to use Supplier's trademarks, logos, trade names, and service marks for the purpose of promoting UC eProcurement sites to the UC community. UC acknowledges Supplier's right, title, and interest in and to Supplier's Marks and Supplier's exclusive right to use and license the use of Supplier Marks and agrees not to claim any title to Supplier Marks or any right to use Supplier Marks except as permitted by this Appendix. UC will include all notices and legends with respect to Supplier trademarks, trade names, or copyrights as may be required by applicable trademark and copyright laws or which may be reasonably requested by Supplier. Upon termination of this Appendix, all rights to Supplier Marks conveyed by Supplier to UC will cease and UC will destroy or return to Supplier all media with Supplier Marks. Supplier specifically reserves any and all right to Supplier Marks not specifically granted to UC.

(ii) The licenses granted in the previous paragraphs regarding UC Marks and Supplier Marks are subject to the ongoing approval of the party owning the respective trademarks, logos, trade names, or copyrights. Such ongoing approval includes the ability to terminate – at any time, for any reason, and in the sole discretion of the owner of the respective trademarks, logos, trade names, or copyrights – the trademark licenses provided in the preceding paragraphs for any particular trademark, logo, trade name, or copyrighted work without necessarily terminating this Appendix. Each party agrees not to take any action that will adversely reflect upon or damage the goodwill, reputation, or the brand value of the other party. Each party further agrees not to take any action that is inconsistent with the other party's ownership of the respective trademarks, trade names, or copyrights. At all times (including following termination of the Agreement), Supplier agrees to comply with Section 92000 of California's Education Code.

(a) Grant of License. Supplier hereby grants UC a non-exclusive, royalty-free: (i) license to use, copy, transmit, and display the Catalog, any information contained therein and the Supplier Marks for the purposes of permitting Customers to access information about and order Supplier Goods and/or Services from a Catalog and (ii) if Supplier is using a Punch-out Catalog, right to link to and access the Punch-out Catalog on the Supplier Site, for the purposes of permitting Customers to access the Supplier Website and permitting Customers to order Supplier Goods and/or Services.

(b) Modifications. UC will not modify or remove any of the proprietary rights markings in the Catalog. UC will not modify the content of the Catalog, except as indicated by Supplier, but may require Supplier to make and submit modifications if required as part of this agreement. However, for hosted catalogs, UC reserves the right to attach flags to catalog items as an aid to shoppers in selecting preferred items, such as green or recycled. UC will not make any representations or warranties, or provide any information, to any third party regarding any Supplier Goods and/or Services (including, but not limited to, any representations or warranties of any information regarding availability, delivery, pricing, characteristics, qualifications or specifications thereof). If UC believes in good faith that any Supplier information does not conform to the requirements of the associated UC Agreement or this Appendix, UC will be entitled to withdraw the Catalog from UC eProcurement sites. In such a case, UC will promptly notify the Supplier of the actions it has taken and will work with the Supplier promptly to resolve UC's concerns. When UC's

concerns are satisfactorily resolved UC will promptly restore the Catalog, if appropriate. UC will have no liability to the Supplier or anyone else for exercising these rights.

(c) Acknowledgment. Each party acknowledges that the technology embodied in the other party's Site may be based on patented or patentable inventions, trade secrets, copyrights or other intellectual property or proprietary rights ("Intellectual Property Rights") owned by the other party and its applicable licensors.

(d) UC Rights. As between the parties, UC will be the sole owner of – or, with respect to any items licensed by UC, will retain all rights to all Intellectual Property Rights associated with UC eProcurement sites, including any modifications, updates, enhancements or upgrades to any of the foregoing, as well as any Order Data generated or collected on such site (collectively, the "UC Materials"). Except as provided herein, Supplier may not copy or use in any way, in whole or in part, any UC Materials without UC's prior written approval. Any permitted copies of such property, in whole or in part, alone or as part of a derivative work, will remain UC's sole property. Supplier agrees to reproduce and include UC's copyright, trademark and other proprietary rights notices on any permitted copies of UC Materials including, without limitation, partial copies and copied materials in derivative works. Supplier will not copy or reproduce any third-party copyrighted or trademarked materials, which appear on or are otherwise associated with any UC eProcurement site without UC's prior written consent.

SECTION 7 – MULTIPLE SUPPLIERS

Supplier acknowledges that all UC eProcurement sites are intended to facilitate Users' ability to obtain Goods and/or Services from more than one supplier. Nothing in this Appendix will be construed to prevent UC from entering into similar agreements with any third parties including, without limitation, suppliers that may be in competition with Supplier.

SECTION 8 – WARRANTY DISCLAIMER

UC does not warrant that access to UC eProcurement sites will be uninterrupted or that the results obtained by use of UC eProcurement sites will be error-free.

SECTION 9 – DISPUTES AND CHANGES IN THE SERVICES

(a) UC and Supplier agree to negotiate in good faith to resolve problems, questions and disputes.

(b) Where improvements and clarifications can be made in the business processes related to eProcurement, both parties agree to incorporate such changes as long as they are mutually agreed upon.

SECTION 10 – ADDITIONAL CONTRACTUAL TERMS

In addition to the provisions of Section 4, Section 10 provisions will govern the Catalogs. If the provisions of Sections 4 and 10 conflict, Section 10 will govern.

Type(s) of Catalog(s): At UC's campus discretion, Supplier is allowed to implement both a hosted and/or Punch-out catalog in the UC eProcurement systems. Supplier will be required to comply with UC Location e-commerce requirements on a location by location basis, which includes the decision to move forward with Punch-out or Hosted. Any deviation from the type(s) specified herein must first be agreed upon by UC's Contract Administrator.

Annual Number of Catalogs: Supplier is allowed to submit no more than one (1) catalog per calendar year, with changes as follows:

- Content Additions, Deletions and Other Non-pricing Edits: Custom Core List may be updated from time to time (to address additions, deletions, substitutions and alternate products) upon notification by Supplier to UC (including via e-mail). The goal is to limit this to bi-annual changes, but not more than quarterly.

- Price Changes: once per year
  - Supplier agrees to accumulate price increases into one communication that will be effective March 1 each year. All increases will be summarized in a table (Example below) and Manufacturer Proof Source Letters will be included under a separate cover.

  - Supplier will make a "Best Effort" attempt that no annual price increase will exceed the Consumer Price Index for all Urban Consumers (CPI-U) or 3% of sales, whichever is lower, however Suppler reserves the right to present UC proof source data justifying all increases in excess of 3% that include but are not limited to tariffs, natural disasters and pandemics and include but are not limited to increases on goods and services that are in limited supply or not currently available, including but not limited to PPE, disinfectant cleaners, skincare products and other pandemic related products.

[redacted]

Lead time: Supplier must load the Catalog price file into the e-Procurement system twenty (20) working days prior to the planned go-live date. (Exception – for January 1 updates to enabled catalogs, Supplier must submit the price file no later than 5 weeks prior, as specified in section 4.)

- Number of catalog/price file versions to be supported for this agreement: one (1)
- Categories allowed within Catalog: Janitorial Supplies & Equipment
- Categories blocked within Catalog: All others

DocuSign Envelope ID: 8ACC6917-B67C-447B-8477-D50D2789A916

1. Purpose of the RFP

The purpose of this Request for Proposal ("RFP") is to invite qualified suppliers to prepare and submit proposals to furnish Janitorial Supplies and Equipment to the University of California ("UC" or "University") and other public agencies, in accordance with the requirements set forth in this RFP.

Supplier agrees to make available the services to any UC location and other public agencies upon the terms, conditions and pricing set forth in an agreement awarded in response to Supplier's proposal. OMNIA Partners will be supporting our efforts to market the outcome of the solicitation nationally.

The UC system represents about $20MM annually in spend and the resulting contract represents another $280MM opportunity nation-wide.

2. Background

University of California consists of 10 campuses and the Office of the President. Throughout the system we have thousands of buildings maintained by a dedicated staff utilizing Janitorial Supplies and Equipment every day and night. Each campus has unique needs that influence their volume of purchases and delivery requirements but the goal is consistent, well maintained facilities.

The University of California, as the Principal Procurement Agency, defined in Exhibit A, has partnered with OMNIA Partners to make the resultant contract (also known as the "Master Agreement" in materials distributed by OMNIA Partners) from this solicitation available to other public agencies nationally, including state and local governmental entities, public and private primary, secondary and higher education entities, non-profit entities, and agencies for the public benefit ("Public Agencies"), through OMNIA Partners' cooperative purchasing program. The UC is acting as the contracting agency for any other Public Agency that elects to utilize the resulting Master Agreement. Use of the Master Agreement by any Public Agency is preceded by their registration with OMNIA Partners (a "Participating Public Agency"). Exhibits A through H contain additional information about OMNIA Partners and the cooperative purchasing agreement.

OMNIA Partners is the largest and most experienced purchasing organization for public and private sector procurement. Through the economies of scale created by OMNIA Partners public sector subsidiaries, National IPA and U.S. Communities, our participants now have access to more competitively solicited and publicly awarded cooperative agreements. The lead agency contracting process continues to be the foundation on which we are founded. OMNIA Partners is proud to offer more value and resources to state and local government, higher education, K-12 education and non-profits.

OMNIA Partners provides shared services and supply chain optimization to government, education and the private sector. As a channel partner with Vizient (formally, Novation), OMNIA Partners leverages over $100 billion in annual supply spend to command the best prices for products and services. With corporate, pricing and sales commitments from the Supplier, OMNIA Partners provides marketing and administrative support for the Supplier that directly promotes the Supplier's products and services to Participating Public Agencies though multiple channels, each designed to promote specific products and services to Public Agencies on a national basis. Public Agencies benefit from pricing based on aggregate spend and the convenience of a contract that has already been

DocuSign Envelope ID: 8ACC6917-B67C-447B-8477-D50D2789A916

advertised and publicly competed. The Supplier benefits from a contract that allows Participating Public Agencies to directly purchase goods and services without the Supplier's need to respond to additional competitive solicitations. As such, the Supplier must be able to accommodate a nationwide demand for services and to fulfill obligations as a nationwide Supplier and respond to the OMNIA Partners documents Exhibit A, B, F, and G.

3. Minimum Requirements

- Supplier must be able to demonstrate the capability of providing the required products/services by possessing adequate available resources, including personnel, facilities, systems, organization structure, operation controls, quality control and other related factors.
- Supplier must supply their Dun & Bradstreet number. Finalist will be researched to ensure they meet UC's requirement for financial solvency.
- Supplier must possess all trade, professional, or business licenses as may be required to complete the work and meet the requirements specified by this RFP.
- Supplier must demonstrate successful experience in providing the products and services specified in this RFP as a primary supplier. Suppliers are expected to provide customer contact information for their three largest higher education clients.
- Resulting awardee(s) will be required to participate in a Corporate Social Responsibility assessment through the EcoVadis monitoring platform. The supplier's acceptance and participation in this assessment includes approval that their company scorecard will be shared with the University of California.

New Equipment Requirements

- Warranty service shall be performed by Supplier's field service technician or Manufacturer's trained and authorized service representative.

4. RFP Timeline, Contract Term and Point of Contact

Schedule of Events

Anticipated Action	Anticipated Action Date
Release of Electronic RFP	*Wednesday July 3rd, 2019*
Pre-proposal – How to use CalUSource	*Monday July 15th, 2019 8AM (Pacific Time)* *https://ucsd.zoom.us/j/8585349857* *Phone 669-900-6833* *Meeting ID: 858 534 9857*
Intent To Attend Job Walk RSVP If you do not submit an intent to join the Job Walk by 7/8/19 we cannot guarantee your accommodation due to space limitations and logistics.	*Wednesday July 10th, 2019 12PM (Pacific Time)*
Pre-proposal Conference & Job Walk	Date: *Wednesday July 17th, 2019* Time: *9:00AM – 12:00AM (Pacific Time)*

DocuSign Envelope ID: 8ACC6917-B67C-447B-8477-D50D2789A916

	Address: *131 Innovation Dr., Suite 250* *Irvine, CA 92617* A link to the building location can be found here: https://goo.gl/maps/trW7Tb7KgrWm57EM7
Deadline for Supplier Q&A via Discussion Forum	*Monday July 29th, 2019, 8:01AM (Pacific Time)*
Deadline for RFP Response	***Friday August 16th, 2019, 4PM (Pacific Time)***

The University reserves the right to modify the above schedule of events and make changes to other provisions in this RFP. It is the Supplier's responsibility to read the entire document and any addendums, and to comply with all requirements listed herein.

Contract Term

The anticipated term of any agreement issued as a result of this RFP will be for an initial period of 7 (seven) years. The University may, at its option, exercise 3 (three) additional one-year extensions for a total of 10 (ten) years on the same terms and conditions.

Exhibits

In addition to this document, the following exhibits posted under Guidelines and Attachments in CalUSource contain the requirements, terms and conditions for this RFP:

- UC Required Supplier Information
- UC Term and Conditions
- Supplier Bidding Guide for CalUSource
- UC Invoice Transmission and Payment Settlement Terms
- UC Sustainability Policy
- Appendix Federal Government Contracts Special Terms and Conditions
- Campus Delivery Model Matrix
- Schedule I UC Participating Locations
- Cost Bid Worksheet
- Scoring Criteria
- OMNIA Partners Exhibits A-H

Any contract awarded pursuant to this RFP will be in writing and incorporate the RFP requirements and specifications, as well the contents of the Supplier's Proposal as accepted by the University.

Single Point of Contact

The University RFP Administrator is the sole point of contact regarding all procurement and contractual matters relating to the requirements described in this RFP; and is the only office authorized to change, modify, clarify, etc., the specifications, terms and conditions of this RFP and any agreement(s) awarded as a result of this RFP. All questions and requests for clarification concerning this RFP should be entered into the CalUSource Discussion Forum by the questions deadline indicated in the Schedule of Events.

Greg Muller

DocuSign Envelope ID: 8ACC6917-B67C-447B-8477-D50D2789A916

Senior Manager, Strategic Sourcing
University of California
858-534-9857
glmuller@ucsd.edu

5. Scope of Work

There is a total of ten (10) campuses, five (5) medical centers, and various other affiliated locations in the UC network. See SCHEDULE I for UC participating locations. The UC seeks to partner with a Supplier to provide the goods listed in and associated with the categories reflected in the Cost Bid Worksheet in accordance with this Statement of Work and any other documents referenced in the Incorporated Documents section herein and also included dilution control, green products, industrial paper and dispensers, private label products, carpet care, restroom care, waste receptacles, compactors, liners, machines and accessories, institutional and industrial laundry and kitchen, industrial tools and supplies and all other categories in your full line of products and services. Unless otherwise provided in the Agreement, UC will not be obligated to purchase a minimum amount of Goods and/or Services from Supplier.

Supplier shall provide Janitorial Products and Equipment (Goods) including, but not limited to those items and categories listed in the basket of goods in the Cost Bid Worksheet.

Order Packaging and Labeling – Supplier agrees that each UC order will be individually wrapped and labeled with the following information:

- Purchase order number
- Product description, quantity and catalog number of the Product ordered and an open 30-character field for internal identification e.g., UC Storehouse catalog numbers and/or internal customer order numbers; and
- Other information, as may be requested by ordering UC Department.

Packaging slips will be attached to the outside of the package such that it can be inspected by UC at the requesting department and/or receiving dock.

Environmentally Responsible Packaging – Supplier shall use good faith efforts to utilize environmentally responsible packaging and recycling practices to minimize the adverse effects of packaging on the environment.

The University has disallowed the use of expanded plastic foam materials (such as Expanded Polystyrene (EPS), Expanded Polyethylene (EPE), Expanded Polyurethane and expanded plastic foam hybrids) by 2020.

The University requires that all packaging be compliant with the Toxics in Packaging Prevention Act (AB 455) as to be free of any intentionally introduced lead, cadmium, mercury or hexavalent chromium, and containing no incidental concentrations of these regulated metals greater than 100 parts per million (ppm) by weight. In addition, the University requires that all packaging meet at least one of the criteria listed below:

a. Uses bulk packaging;

DocuSign Envelope ID: 8ACC6917-B67C-447B-8477-D50D2789A916

b. Uses reusable packaging (e.g. totes reused by delivery service for next delivery);

c. Uses innovative packaging that reduces the weight of packaging, reduces packaging waste, or utilizes packaging that is a component of the product;

d. Maximizes recycled content and/or meets or exceeds the minimum post-consumer content level for packaging in the U.S. Environmental Protection Agency Comprehensive Procurement Guidelines;

e. Uses locally recyclable or certified compostable material.

Receiving Locations – Supplier shall provide inside and dock delivery to all UC current and future authorized personnel delivery points, as requested by UC or participating agencies.

Last Mile Central Receiving: Supplier will provide a financial incentive to locations that can consolidate deliveries at a central location and distribute to end users throughout campus.

Standard Delivery Requirements – Supplier shall deliver all UC orders received by 5:00PM local time the next business day. Supplier shall meet each participating agencies' specific delivery requirements.

All deliveries will be FOB Destination. Delivery charges and risk of loss will be borne by the supplier.

Rush Delivery Requirements – Supplier shall deliver UC emergency orders within four (4) hours after receipt of order at no additional charge to UC. Rush emergency delivery orders for same day delivery must be requested by UC prior to 1:00PM Pacific Time. Supplier cannot guarantee, but agrees to use good faith efforts to provide same day delivery for rush orders UC places after 1:00PM Pacific Time.

Returns – Supplier shall accept goods returned by UC or participating agencies if in resalable condition and if made within thirty (30) days of original shipment. Returns for special order (non-stock) items may result in a 15% restocking fee. Supplier must pick up returns from the ordering department location within three (3) business days.

Credit – Requests for credit can be transmitted by the ordering UC personnel via the established order management system (telephone, fax, paper return form, and web-based). Chargebacks and credit memos will be issued to UC ordering departments in the current month's billing period. Return items will be credited at cost. If service were purchased via UC purchasing card, credit must be issued to the same purchasing card.

Invoicing – All invoices must clearly indicate the following information:

- Sales tax as a separate line item;
- Freight costs, if applicable, as a separate line item;
- UC Purchase Order or Release Number;
- Description, quantity, catalog number and manufacturer number of the item ordered;
- Net cost of each item;
- Any applicable discount;
- Reference to original order number for all credit invoices issued;
- Purchasing card information, if applicable

DocuSign Envelope ID: 8ACC6917-B67C-447B-8477-D50D2789A916

Catalog – Supplier will provide Supplier's Catalog electronically at no cost to UC. The Catalog shall integrate into the UC e-commerce platform for each location. Supplier will provide for UC, if requested by UC, real-time secured access to Supplier's automated system including web-based order management, customized electronic Catalog with UC pricing and contract terms, as defined in the RFP and Supplier's response. Supplier will provide UC with the necessary network, data lines, and/or computer software at no additional cost to UC.

Training – Supplier will provide reasonable sufficient training to UC's or participating agencies authorized personnel for any equipment or dispensing systems provided to UC.

Program Management – Supplier will provide the necessary staff and resource to support UC's program management function as outlined in this Statement of Work and the Supplier's response to RFP, including but not limited to:

- Marketing Program to increase sales activity;
- Coordinating Program implementation;
- Providing superior customer service;
- Promoting alternate Goods to reduce cost and meet UC sustainability objectives;
- Demonstrating new Goods;
- Managing the continuous improvement process;
- Providing on-going contract monitoring and maintenance;
- Offering Services cost reduction and process improvement opportunities to UC;
- Conducting monthly account review meetings.

Service Standards – Supplier will provide the following minimum service standards:

Normal delivery – next business day, or on the delivery date requested, whichever is later

Rush emergency delivery – within 4 hours

Pick up returns – within 3 business days

Request for reports – new reports within 5 business days, or as scheduled

Order fill rate (stock items) – maintain a minimum order fill rate of 95%, where all stock item orders will be fulfilled either (1) the next business day or (2) on the delivery date requested, whichever is later. Fill rate is calculated as: (# of orders Delivered as requested/# orders requested).

Delivery accuracy – maintain a minimum delivery accuracy of 95%, based on the percent of the entire order being fulfilled correctly.

Invoice Billing Accuracy – maintain an invoice billing accuracy of 99%. Invoice billing accuracy is calculated as: (1-(total number of credit memo line items/total number of invoice line items)) and (1-(total credit dollars issued/total dollars invoiced)).

24-Hour Quote Turnaround – all quotation requests will be acknowledged within 24 hours of request, and provided within 3 business days.

DocuSign Envelope ID: 8ACC6917-B67C-447B-8477-D50D2789A916

Reporting – Supplier shall provide quarterly reports on all spend for all locations including specifics related to sustainability (breakdown by month, by category, by campus total spend, total system spend, total sustainable spend, % Sustainable spend, Actual vs Goal).

6. Pricing

Suppliers are to provide specific unit pricing, a discount from a verifiable price index, and a suggested market basket for participating members on the Price Workbook. Prices/discounts shall remain firm and will include all charges that may be incurred in fulfilling requirement(s) for the twelve-month period following contract award.

7. Evaluation Criteria

Evaluation and Award: Best Value Methodology

Responsive Proposals will be evaluated using a Best Value method. Best Value means the most advantageous balance of price/cost, quality, service performance and other elements, as defined by the University. University evaluators will determine the Proposal's value by scoring the Proposals based on a uniform set of weighted evaluation criteria. Each Proposal's Best Value score will be the average of all evaluators' total scores awarded for the Proposal. The University will then determine each Proposal's Price Score by the following method. The University will have determined the Maximum Possible Price Score prior to the Proposal due date. The Proposal with the Maximum Possible Price Score will be considered the lowest responsive Proposal.

All other responsive Proposals will receive a proportion of the Maximum Possible Price Score equal to the quotient of the lowest Proposal's cost divided by that Proposal's cost. Each Proposal's Price Score will be added to that Proposal's Quality Point Score to get that Proposal's Total Score. The Proposal with the highest Total Score will be considered the "Best Value". The Proposal with the next highest Total Score will be considered the second Best Value, and so on. The University will then determine if the Supplier submitting the Best Value Proposal is responsible. The apparent RFP winner will be the responsible Supplier submitting the Best Value Proposal.

Example:

Sample Price/Cost Normalization	Total Price/Cost Points Available -	500
Supplier #1: Low supplier at $50,000 receives maximum points		500
Supplier #2: Next lowest supplier at $55,000 receives 90.9% of max points		455
Supplier #3: Highest supplier at $60,000 receives 83.3% of max points		417

Above points are added to the other criteria point totals to come up with the total points. Supplier with the highest overall total points is considered the lowest responsible supplier with best value in terms of price/cost, quality, service and performance that meet the University's requirements.

Right to Cancel/Modify

DocuSign Envelope ID: 8ACC6917-B67C-447B-8477-D50D2789A916

The University reserves the right to change any aspect of, terminate, or delay this RFP, the RFP process and/or the program outlined within this RFP at any time. Notice shall be provided in a timely manner thereafter. The University may award the contract without further discussion or may enter into negotiations with the apparent RFP winner. Should the apparent RFP winner fail to accept the award, the University may determine that that Supplier has abandoned its Proposal. The University may then enter into negotiations with the responsible Supplier submitting the second Best Value Proposal. If that Supplier fails to accept the award, the University may determine that that Supplier has abandoned its Proposal and enter into negotiations with the responsible Supplier submitting the third Best Value Proposal and so on to each successive responsible Best Value Supplier until an award is made and accepted. The University also reserves the right to request Best and Final Offers (BAFO's) if an awardable proposal is determined.

Right to Make No Award

The University reserves the right to reject all Proposals and to make no award. Unless stated otherwise in this RFP, the University reserves the right to make multiple awards or to award items separately or in the aggregate as the interests of University may appear.

Contract Form

Any contract awarded pursuant to this RFP will be in writing and incorporate the RFP requirements and specifications, as well the contents of the Supplier's Proposal as accepted by the University.

8. Additional Terms

Insurance

If selected for award, the awardee shall deliver the PDF version of the Certificate of Insurance to UC's Buyer or participating agency, by email with the following text in the Subject field: CERTIFICATE OF INSURANCE – [Supplier name].

Below 464 make up the initial Core List of prices for this agreement. From time to time at University of California's discretion this list may be updated to add/delete individual parts or categories. Supplier agrees to accumulate price increases into one communication that will be effective March 1 each year. All increases will be summarized in a table and Manufacturer Proof Source Letters will be included under a separate cover. Supplier will make a "Best Effort" attempt that no annual price increase will exceed the Consumer Price Index for all Urban Consumers (CPI-U) or 3% of sales, whichever is lower, however Supplier reserves the right to present UC proof source data justifying all increases in excess of 3% that include but are not limited to tariffs, natural disasters and pandemics and include but are not limited to increases on goods and services that are in limited supply or not currently available, including but not limited to PPE, disinfectant cleaners, skincare products and other pandemic related products. If Bidder's catalog or list price of Products is reduced, University shall benefit from a corresponding price reduction. Therefore, it is essential that manufacturer price decreases be passed on to University immediately and the supplier agrees to do so. Further, supplier will provide notice to University of all such price changes in a timely manner.

DocuSign Envelope ID: 8ACC6917-B67C-447B-8477-D50D2789A916

DocuSign Envelope ID: 8ACC6917-B67C-447B-8477-D50D2789A916

CATEGORY	DISCOUNT %
Paper	10
Chemicals	15
Liners	15
Equipment & Dispensers	10
Hand Soaps & Sanitizers	15
Supplies	15
Gloves	15
Other	10

Attachment A

Custom Catalog

THE HOME DEPOT Pro™

MPM-0197

LINCOLN PURCHASING

Custom Catalog

Customer Number: 1238654

Table Of Contents

CLEANING & JANITORIAL	3
GROUNDS & POOL SUPPLIES	19

Pricing: To assist you in the control of your budget, prices contained herein are scheduled to be firm for the life of the catalog. However, from time to time, unavoidable cost increases from the manufacturer may occur. In these instances, price adjustments may be necessary. If a price is to change, we will make every effort to notify you of the change at the time of order placement.

The pictures and drawings in this catalog are intended for a general description only and, unless specified, do not represent any specific brand. Original manufacturers' names or stock numbers which may appear in this catalog are for the purpose of identification only and are not a representation either expressed or implied that items offered or sold are genuine products of such original manufacturers. Every effort will be made to ship the brand identified, however, Home Depot Pro, reserves the right to ship equivalent or superior product in the event that the brand identified is not available. Possession of this catalog does not obligate Home Depot Pro to sell. This catalog is the property of and embodies trade secrets of Home Depot Pro. Not responsible for typographics or pictorial errors.

THE HOME DEPOT Pro™ Institutional

Rubbermaid Commercial Products Jumbo Smooth Sweep Angle Broom

Priced Each: **$8.52**

Item #: **RCP638906BK**

Notes

Renown 54 in. Duo-Sweep Flagged Angle Broom (12-Case)

Priced Each: **$8.55**

Item #: **REN03944**

Notes

Renown 54 in. Duo-Sweep Non-Flagged Angle Broom (12-Case)

Priced Each: **$11.12**

Item #: **REN03945**

Notes

Kimtech WetTask System Prep Wipers for Bleach, Disinfectants and Sanitizers (6 Rolls/Case, 90 Sheets/Roll)

Priced per Case: **$48.72**

Item #: **KCC06411**

Notes

Renown Pre-Moistened Stainless Steel Cleaning Wipes (45 per Roll)

Priced per Case of 6: **$65.46**

Item #: **REN05059**

Notes

3M 6 in. x 9 in. Light Duty Cleansing Pads (20-Pack)

Priced per Case of 60: **$65.49**

Item #: **MMM07445**

Notes

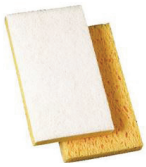

Renown Light-Duty Scrub Sponge (20-Pack)

Priced per Case of 20: **$17.80**

Item #: **REN02117**

Notes

PUMICE SCOURING STICK

Priced per Box of 12: **$33.36**

Item #: **559004**

Notes

3M 6.1 in. x 3.6 in. Light-Duty Scrub Sponge (20-Pack)

Priced per Case of 20: **$33.80**

Item #: **MMM08251**

Notes

Renown WOOD DUST MOP HANDLE, CLAMP-ON, 60X1 IN.

Priced Each: **$5.69**

Item #: **REN02622-IB**

Notes

Renown #16 Standard White Cotton Cut-End Wet Mop Head with 1 in. Head Band

Priced Each: **$2.72**

Item #: **REN02276**

Notes

Renown 16 oz. White Cotton Heavy-Duty Cut-End Wet String Mop Head with 1 in. Head Band

Priced Each: **$3.48**

Item #: **REN02357**

Notes

Renown #24 Standard White Cotton Cut-End Wet Mop Head with 1 in. Head Band

Priced Each: **$4.17**

Item #: **REN02278**

Notes

Renown 20 oz. White Cotton Heavy-Duty Cut-End Wet String Mop Head with 1 in. Head Band

Priced Each: **$3.81**

Item #: **REN02358**

Notes

Renown 24 oz. White Cotton Heavy-Duty Cut-End Wet Mop Head with 1 in. Head Band

Priced Each: **$4.91**

Item #: **REN02359**

Notes

Renown Cotton Cut-End Mops

Priced per Case of 6: **$25.59**

Item #: **311879359**

Notes

Rubbermaid Commercial Products Gripper 60 in. Clamp-Style Aluminum Mop Handle

Priced Each: **$13.61**

Item #: **RCPH2260000**

Notes

Renown 12.25 in. Contour Trigger Sprayer in Blue

Priced Each: **$0.67**

Item #: **REN05116**

Notes

Renown Foamer/Trigger Sprayer, 9-7/8 in. Tube

Priced Each: **$0.94**

Item #: **REN05140**

Notes

IMPACT PRODUCTS Spray Alert 24 fl. oz. Trigger Sprayer and Bottle Foam Dispensing Gun (3-Pack)

Priced Each: **$2.35**

Item #: **IMP5024SS**

Notes

Renown 24 oz. Plastic Spray Bottle with Graduations

Priced Each: **$0.66**

Item #: **REN05120**

Notes

Renown 32 oz. Plastic Spray Bottle with Graduations

Priced Each: **$0.61**

Item #: **REN05121**

Notes

Georgia-Pacific Flat Box Facial Tissue, White (30-Boxes Per Case)

Priced per Case of 30: **$19.26**

Item #: **GPT47410**

Notes

enMotion Brown High Capacity Hardwound Paper Towel Roll (6 Rolls per Case)

Priced per Case of 6: **$47.90**

Item #: **GPT89480**

Notes

enMotion 10 in. Hardwound Paper Towel Roll, White (6-Rolls Per Case)

Priced per Case of 6: **$57.80**

Item #: **GPT89460**

Notes

enMotion 8 in. 1-Ply Towel Roll in White (6 Rolls per Case)

Priced per Case of 6: **$52.12**

Item #: **GPT89420**

Notes

Scott Hard Roll Paper Towels Absorbency Pockets for Dispenser (1150/Roll, 6 White Rolls/Case, 6,900 ft.)

Priced per Case of 6: **$56.30**

Item #: **KCC25702**

Notes

SofPull Regular Center Pull Premium Paper Towel, White (6-Rolls Per Case)

Priced per Case of 6: **$36.51**

Item #: **GPT28124**

Notes

Georgia-Pacific Brown Multifold Paper Towels (16-Packs Per Case 250-Count)

Priced per Case of 16: **$20.31**

Item #: **GPT23304**

Notes

Pacific Blue Basic S-Fold Recycled Brown (3rd Party) Paper Towel (16-Packs Per Case)

Priced per Case of 16: **$19.45**

Item #: **GPT23504**

Notes

BigFold Z C-Fold White Premium Replacement Paper Towels

Priced per Case of 10: **$30.85**

Item #: **GPT20887**

Notes

Pacific Blue Basic White Multifold Paper Towel (16-Packs Per Case)

Priced per Case of 16: **$22.47**

Item #: **GPT20204**

Notes

Scott Natural Hard Roll Paper Towels (800 ft./Roll, 12 Rolls/Case, 9,600 ft./Case)

Priced per Case of 12: **$52.17**

Item #: **KCC04142**

Notes

Georgia-Pacific Brown High Capacity Roll Paper Towel (6 Rolls)

Priced per Case of 6: **$24.05**

Item #: **GPT26301**

Notes

Compact 2-Ply Coreless Bath Tissue, Toilet Paper, White (36-Rolls Per Case)

Priced per Case of 36: **$48.68**

Item #: **GPT19375**

Notes

Compact White Coreless High Capacity 1-Ply Toilet Paper (18 Rolls Per Case)

Priced per Case of 18: **$38.72**

Item #: **GPT19374**

Notes

Compact White Coreless 2-Ply High Capacity Toilet Paper (18-Rolls Per Case)

Priced per Case of 18: **$37.07**

Item #: **GPT19378**

Notes

Georgia-Pacific 2-Ply Jumbo Jr. EPA Compliant Bathroom Tissue, Toilet Paper, White (8-Rolls Per Case)

Priced per Case of 8: **$20.31**

Item #: **GPT12798**

Notes

Scott 2-Ply, White 1000 Jumbo Roll Commercial Toilet Paper (12 Rolls/Case, 1000 ft./Roll)

Priced per Case of 12: **$32.65**

Item #: **KCC07805**

Notes

Scott 1-Ply White Jumbo Roll (JR) Commercial Toilet Paper (12 Rolls/Case, 2,000 ft./Roll)

Priced per Case of 12: **$34.61**

Item #: **KCC07223**

Notes

Scott Jumbo Roll Junior White Coreless Toilet Paper 2-Ply (12-Rolls/Case, 1,150 ft./Roll)

Priced per Case of 12: **$40.41**

Item #: **KCC07006**

Notes

2-Ply White Bath Tissue (96-Rolls)

Priced per Case of 96: **$44.06**

Item #: **SAR21724**

Notes

TORK Universal Single Roll 2-Ply Toilet Paper (500 Sheets per Roll 96 Rolls per Case)

Priced per Case of 96: **$39.59**

Item #: **SCATM1616S**

Notes

Renown Single Roll 2-Ply 4 in. x 3.75 in. Toilet Paper (500-Sheets per Roll, 96-Rolls per Case)

Priced per Case: **$40.94**

Item #: **309116312**

Notes

Preference 2-Ply Embossed Bathroom Tissue, Toilet Paper, White (80-Rolls Per Case)

Priced per Case of 80: **$45.83**

Item #: **GPT18280-01**

Notes

Georgia-Pacific White 1-Ply High Capacity Standard Bathroom Tissue (48-Rolls Per Case)

Priced per Case of 48: **$43.45**

Item #: **GPT14448-01**

Notes

Upper Limits Upper Limits 1 Gallon Floor Finish (4 per Pack)

Priced per Case of 4: **$48.08**

Item #: **SPA4090-04**

Notes

SPARTAN CHEMICAL COMPANY FloorFront 1 Gallon Floor Finish

Priced per Gallon: **$13.41**

Item #: **SPA4047-04**

Notes

Spartan Chemical Co. Spraybuff 1 Quart Floor Maintainer

Priced per Case of 12: **$20.88**

Item #: **SPA3040-12**

Notes

SPARTAN CHEMICAL COMPANY Shineline Emulsifier Plus 1 Gallon Fresh Scent Floor Finish Remover

Priced per Case of 4: **$38.00**

Item #: **SPA0084-04**

Notes

SPARTAN CHEMICAL COMPANY Shineline Emulsifier Plus 5 Gallon Fresh Scent Floor Finish Remover

Priced per Pail: **$60.16**

Item #: **SPA0084-05**

Notes

SPARTAN CHEMICAL COMPANY Step Down 5 Gallon Floor Finish Remover

Priced per Pail: **$64.53**

Item #: **SPA0065-05**

Notes

Renown 50 lbs. Powdered Citrus Scented Laundry Detergent for Institutional Laundry Use Only

Priced per Box: **$51.63**

Item #: **REN05648-US**

Notes

SPARTAN CHEMICAL COMPANY Clothesline Fresh 1 Gallon Laundry Detergent

Priced per Case of 4: **$41.12**

Item #: **SPA7003-04**

Notes

Spitfire 32 oz. Red Pine Power Cleaner Degreaser (12 qt. Per Case)

Priced per Case of 12: **$41.40**

Item #: **JWP95891789**

Notes

STRIDE 1 Gal. Citrus Neutral Cleaner (4 per Case)

Priced per Case of 4: **$25.28**

Item #: **JWP903904**

Notes

N ALL PURPOSE FOAM CLEANER AEROSOL, 19 OZ.

Priced per Case of 12: **$33.48**

Item #: **REN05008-AM**

Notes

Spartan Chemical SD-20 1 Gallon Citrus Scent All-Purpose Degreaser

Priced per Case of 4: **$25.24**

Item #: **SPA0020-04**

Notes

Spartan Clean by 4D 1 Gal. Fresh Scent 1-Step Cleaner/Disinfectant

Priced Each: **$16.40**

Item #: **313441970**

Notes

SPARTAN CHEMICAL COMPANY 6.5 oz. Aerosol Can Chewing Gum Remover

Priced per Case of 12: **$39.72**

Item #: **SPA6445**

Notes

Crew 32 oz. Super Blue Toilet Bowl Cleaner

Priced per Case of 12: **$36.12**

Item #: **JWP94476081**

Notes

Renown 32 oz. Mint 9 Bowl Cleaner

Priced per Case of 12: **$21.24**

Item #: **REN02825-MS**

Notes

SPARTAN CHEMICAL COMPANY NABC 1 Quart Floral Scent Restroom Disinfectant No Dye (12 per Pack)

Priced per Case of 12: **$28.20**

Item #: **SPA7226-12**

Notes

Spartan Chemical Co. COPY 0 SparCling 1 Quart Mint Scent One Step Cleaner/Disinfectant (12 per Pack)

Priced per Case of 12: **$19.16**

Item #: **SPA7118-12-C**

Notes

Foamy Q & A Foamy Q & A 1 Quart Citrus Scent One Step Cleaner/Disinfectant

Priced per Case of 12: **$27.12**

Item #: **SPA3200-12**

Notes

SPARTAN CHEMICAL COMPANY NABC Plus IV 1 Quart Floral Scent Restroom Cleaner

Priced per Case of 12: **$19.32**

Item #: **SPA3310-12**

Notes

RJ8 RJ8 1 Quart Mint Scent Restroom Cleaner

Priced per Case of 12: **$24.84**

Item #: **SPA7110-12**

Notes

Peroxy II fbc Peroxy II fbc 1 Quart Caribbean Fragrance Scent Restroom Sanitizer

Priced per Case of 12: **$21.60**

Item #: **SPA3535-12**

Notes

GS Restroom Cleaner GS Restroom Cleaner 1 Quart Restroom Disinfectant

Priced per Case of 12: **$23.28**

Item #: **SPA3503-12**

Notes

SPARTAN CHEMICAL COMPANY RJ8 1 Gallon Mint Scent Restroom Cleaner

Priced per Case of 4: **$32.52**

Item #: **SPA7110-04**

Notes

Simple Green 32 oz. Lime Scale Remover

Priced per Case of 12: **$99.12**

Item #: **SMP50032**

Notes

1 Gal. Carpet Shampoo/Cleaner

Priced per Case of 4: **$64.96**

Item #: **JWP95002689**

Notes

32 oz. General Purpose Spotter

Priced per Case of 6: **$34.74**

Item #: **JWP904192**

Notes

DIVERSEY INC VIREX II 256 One-Step Cleaner/Deodorant Germicidal Smart Dose

Priced per Case of 2: **$47.98**

Item #: **JWP5019317**

Notes

Spartan Chemical GS Neutral Disinfectant Cleaner 2 Liter One Step Cleaner/Disinfectant (4 per Pack)

Priced Each: **$7.10**

Item #: **SPA3513**

Min. Qty. sold: 4
In multiples of: 4

Notes

Spartan Chemical Green Solutions 2 Liter Industrial Cleaner

Priced per Case of 4: **$34.12**

Item #: **SPA3515**

Notes

Spartan Chemical Co. BioRenewables 2 Liter Waterfall Scent Glass Cleaner

Priced per Case of 4: **$36.64**

Item #: **SPA4835**

Notes

SPARTAN CHEMICAL COMPANY 2 Liter Clean by Peroxy Spring Rain Scent Multi-Purpose Cleaner

Priced Each: **$11.77**

Item #: **SPA4820**

Notes

Oxivir Pre-Wetted Disinfectant Cleaner Wiipes (160-Count Refill, 4-Case)

Priced per Case of 4: **$119.32**

Item #: **JWP100850925**

Notes

SPARTAN CHEMICAL COMPANY TB-Cide Quat 1 Quart Lemon Scent One Step Cleaner/Disinfectant

Priced per Case of 12: **$23.40**

Item #: **SPA1021-12**

Notes

Oxivir TB 1 Qt. Disinfectant Cleaner (12-Case)

Priced per Case of 12: **$45.96**

Item #: **JWP4277285**

Notes

Steriphene II Steriphene II Brand 20oz. Aerosol Can Spring Breeze Scent Disinfectant Deodorant

Priced per Case of 12: **$47.88**

Item #: **SPA6075**

Notes

Spartan Chemical Consume Eco-Lyzer 1 Gallon Floral Scent Disinfectant/Deodorant

Priced per Case of 4: **$41.56**

Item #: **SPA3297-04**

Notes

SPARTAN CHEMICAL COMPANY HDQ Neutral 1 Gallon Citrus Scent One Step Cleaner/Disinfectant (4 per Pack)

Priced per Case of 4: **$40.12**

Item #: **SPA1202-04-C**

Notes

0.36 Gal. Glass Cleaner

Priced per Case of 2: **$38.44**

Item #: **JWP95019510**

Notes

ZEP 19 oz. Foaming Glass Cleaner

Priced Each: **$3.39**

Item #: **203759590**

Notes

Renown 19 oz. Heavy-Duty Glass Cleaner Aerosol

Priced per Case of 12: **$27.60**

Item #: **REN05002-AM**

Notes

Spartan Chemical Co. 20oz. Aerosol Can Spring Fresh Fragrance Scent Glass Cleaner

Priced per Case of 12: **$36.36**

Item #: **SPA6217**

Notes

Spartan Soap Dispenser in White

Priced Each: **$0.00**

Item #: **SPA9756**

Notes

Compact Grey Plastic Spring Loaded Coreless Tissue Adapter Spindle Fits Bobrick 288 Rotating

Priced Each: **$2.96**

Item #: **GPT50011**

Notes

Purell 1200 ml Foam Hand Sanitizer Refill (2-Case)

Priced per Case of 2: **$58.36**

Item #: **GOJ5392-02**

Notes

GoJo 8 oz. Micrell Antibacterial Lotion Soap

Priced per Case of 12: **$36.84**

Item #: **GOJ9752-12**

Notes

Purell Advanced 1200 mL Fragrance Free Luxurious Foam Hand Sanitizer Dispenser Refill (4-Pack)

Priced per Case of 4: **$89.92**

Item #: **313464684**

Notes

Purell TFX 1200 ml Instant Hand Sanitizer

Priced per Case of 4: **$46.80**

Item #: **GOJ5456-04**

Notes

Purell 1000 ML Instant Hand Sanitizer Refill

Priced per Case of 8: **$79.44**

Item #: **GOJ2156-08**

Notes

Renown 1,200 ml Pomeberry EFA Foam Hand Soap

Priced per Case of 2: **$41.12**

Item #: **REN02467**

Notes

GOJO INDUSTRIES 40.6 oz. Pomeberry Foam Hand-Wash Refill

Priced per Case of 2: **$41.14**

Item #: **GOJ1916-02**

Notes

GOJO INDUSTRIES GOJO LTX ANTIBACTERIAL FOAM HAND SOAP REFILL, 1,200 ML, PURPLE

Priced per Case of 2: **$45.22**

Item #: **GOJ1912-02**

Notes

Sany+ 1 Gal. Foaming Hand Soap

Priced Each: **$6.32**

Item #: **306909925**

Notes

Spartan Lite'n Foamy Cranberry Ice 1 Gallon Hand Wash

Priced per Case of 4: **$51.64**

Item #: **SPA3152-04**

Notes

GoJo Luxury Foam Hair/Body Wash, 2000ml

Priced per Case of 2: **$48.10**

Item #: **GOJ5263-02**

Notes

Spartan Lite'n Foamy Citrus Fresh 1 Gallon Hand Wash

Priced per Case of 4: **$39.48**

Item #: **SPA3308-04**

Notes

GoJo Pro TDX 2,000 ml Multi-Green Hand Cleaner Refill

Priced per Case of 4: **$76.36**

Item #: **GOJ7265-04**

Notes

7-1/2 in. x 3-1/2 in. x 10 in. Kraft Waxed Paper Liners for Sanitary Napkin Receptacles Bags Brown (500 Per Case)

Priced per Case of 500: **$16.63**

Item #: **HOSKL-260**

Notes

Ecore Citrus Mango Cartridge Fruity Tangerine Scent Air Freshener (6 per Box, 8 Boxes per Case)

Priced per Case of 48: **$375.36**

Item #: **SPA8084**

Notes

Consume Consume 1 Quart Organic Digestor

Priced per Case of 12: **$25.32**

Item #: **SPA3197-12**

Notes

IMPACT Fresh Blast Fragrance Black Urinal Mat

Priced Each: **$6.60**

Item #: **IMP1525-5-90**

Notes

Renown Orchard Zing Disposable Urinal Floor Mat

Priced per Case of 6: **$39.06**

Item #: **REN05127**

Notes

Renown Wave 3D Cotton Blossom Urinal Screen

Priced per Case of 60: **$117.00**

Item #: **REN03123**

Notes

Renown Wave 3D Mango Urinal Screen

Priced per Case of 60: **$117.00**

Item #: **REN03121**

Notes

Renown Wave 3D Spiced Apple Urinal Screen

Priced per Case of 60: **$117.00**

Item #: **REN03119**

Notes

Renown Cucumber Melon Wave 3D Urinal Screen (10-Pack)

Priced per Case of 60: **$117.00**

Item #: **REN03120**

Notes

Renown Wave 3D Herbal Mint Urinal Screen

Priced per Case of 60: **$117.00**

Item #: **REN03122**

Notes

Renown Tidal Wave Ripe Mango Urinal Screen (Box of 6)

Priced per Case of 36: **$151.20**

Item #: **REN03095-FR**

Notes

Renown Tidal Wave Fabulous Urinal Screen (Box of 6)

Priced per Case of 36: **$151.20**

Item #: **REN03098-FR**

Notes

Renown Tidal Wave Cotton Fresh Urinal Screen (Box of 6)

Priced per Box of 6: **$25.20**

Item #: **REN03097-FR**

Notes

Renown Tidal Wave Cucumber Melon Urinal Screen (Box of 6)

Priced per Case of 36: **$151.20**

Item #: **REN03096-FR**

Notes

Renown Tidal Wave Cinnamon Stick Urinal Screen (Box of 6)

Priced per Case of 36: **$151.20**

Item #: **REN03094-FR**

Notes

Renown 25 Gal. in Natural Can Liner 30 in. x 37 in. 8 Mic (25/Roll, 20-Roll/Case)

Priced per Case of 500: **$17.69**

Item #: **REN12511-CA**

Notes

Renown Low-Density 33 Gal. 1.0 Mil 33 in. x 40 in. Clear Trash Bags (250 Per Case)

Priced per Case of 250: **$41.89**

Item #: **REN23325-CL**

Notes

Renown 25 Gal. in Natural Can Liner 30 in. x 37 in. 13 Mic (25/Roll, 20-Roll/Case)

Priced per Case of 500: **$28.32**

Item #: **REN12506-CA**

Notes

Renown 27 Gal. 16 mic 30 in. x 37 in. Natural Can Liner (25 per Roll, 20-Roll per Case)

Priced per Case of 500: **$33.44**

Item #: **REN12512-CA**

Notes

Renown 25 Gal. 30 in. x 37 in. 10 mic Natural Can Liner (25/Roll, 20-Roll/Case)

Priced per Case of 500: **$22.07**

Item #: **REN12500-CA**

Notes

Renown 20 Gal. to 30 Gal. 0.65 mil 30 in. x 36 in. Clear Low-Density Trash Bags (25 per Roll, 10-Rolls per Case)

Priced per Case of 250: **$28.05**

Item #: **REN22515-CA**

Notes

Renown 60 Gal. 14 mic 38 in. x 60 in. Natural Can Liner (25 per Roll, 8-Roll per Case)

Priced per Case of 200: **$24.99**

Item #: **REN16001-CA**

Notes

Renown 60 Gal. 0.74 mil 38 in. x 58 in. White Can Liner (25 per Roll, 4-Roll per Case)

Priced per Case of 100: **$17.43**

Item #: **REN26002-CA**

Notes

Renown 60 Gal. 90 mil 38 in. x 58 in. White Can Liner (20 per Roll, 5-Roll per Case)

Priced per Case of 100: **$22.42**

Item #: **REN26011-CA**

Notes

Renown 10 Gal. 24 in. x 24 in. Clear 6 mic 50-Liners per Roll Trash Can Liners (20-Rolls per Case)

Priced per Case of 1000: **$14.14**

Item #: **REN11000-IG**

Notes

Renown 10 Gal. 0.6 Mil Clear Low-Density Trash Bags (500 per Case)

Priced per Case of 500: **$19.20**

Item #: **REN21015-CL**

Notes

30 in. x 37 in. 10 mic. 20 Gal. to 30 Gal. Natural High-Density Trash Bags (500/Case)

Priced per Case: **$24.65**

Item #: **HBAZ6037MN**

Notes

HDX Swimming Pool Pumice Stone Block

Priced Each: **$6.36**

Item #: **203796273**

Notes

Hudson 3 Gal. SUPER SPRAYER

Priced Each: **$29.45**

Item #: **752191**

Notes

CONTRACT DOCUMENTS

CITY OF LINCOLN, NEBRASKA,
LANCASTER COUNTY,
CITY OF LINCOLN - LANCASTER COUNTY
PUBLIC BUILDING COMMISSION

Unit Price
Carpet / Upholstery Cleaning
Bid No. 20-154

Supersteam
2500 South St
Lincoln, NE 68502-3049
(402) 488-0007

CITY OF LINCOLN-LANCASTER COUNTY, NEBRASKA and
LINCOLN-LANCASTER COUNTY PUBLIC BUILDING COMMISSION
CONTRACT TERMS

THIS CONTRACT, made and entered into by and between **Supersteam, 2500 South St., Lincoln, NE 68502-3049**, hereinafter called "Contractor", and the City of Lincoln, Nebraska, a municipal corporation, and the County of Lancaster, Nebraska, a political subdivision of the State of Nebraska, and the Lincoln-Lancaster County Public Building Commission hereinafter called the "Owners".

WHEREAS, the Owners have caused to be prepared, in accordance with law, Specifications, Plans, and other Contract Documents for the Work herein described, and has approved and adopted said documents and has caused to be published an advertisement for and in connection with said Work, to-wit:

Carpet / Upholstery Cleaning, Bid No. 20-154

and,

WHEREAS, the Contractor, in response to such advertisement, has submitted to the Owners, in the manner and at the time specified, a sealed Proposal/Supplier Response in accordance with the terms of said advertisement; and,

WHEREAS, the Owners, in the manner prescribed by law has publicly opened, read aloud, examined, and canvassed the Proposals/Supplier Responses submitted in response to such advertisement, and as a result of such canvass has determined and declared the Contractor to be the lowest responsible bidder for the said Work for the sum or sums named in the Contractor's Proposal/Supplier Responses, a copy thereof being attached to and made a part of this Contract;

NOW, THEREFORE, in consideration of the sums to be paid to the Contractor and the mutual covenants herein contained, the Contractor and the Owners have agreed and hereby agree as follows:

1. The Contractor agrees to (a) furnish all tools, equipment, supplies, superintendence, transportation, and other accessories, services, and facilities; (b) furnish all materials, supplies, and equipment specified to be incorporated into and form a permanent part of the complete work; (c) provide and perform all necessary labor in a substantial and workmanlike manner and in accordance with the provisions of the Contract Documents; and (d) execute and complete all Work included in and covered by the Owners' award of this Contract to the Contractor, such award being based on the acceptance by the Owner of the Contractor's Proposal, or part thereof, as follows:

Agreement to full proposal

2. The Owners agree to pay to the Contractor for the performance of the Work embraced in this Contract, the Contractor agrees to accept as full compensation therefore, the following sums and prices for all Work covered by and included in the Contract award and designated above, payment thereof to be made in the manner provided by the Owners:

   The Owners will pay for products/service, according to the Line Item pricing as listed in Contractors Proposal/Supplier Response, a copy thereof being attached to and made a part of this Contract. The Owners shall order on an as-needed basis for the duration of the contract. The cost of products or services for City Departments shall not exceed $25,000.00 during the contract term without approval by the City of Lincoln. The cost of products or services for County Agencies shall not exceed $5,000.00 during the contract term without approval by the Board of Commissioners. The cost of products or services for the Public Building Commission shall not exceed $15,000.00 during the contract term without approval by the Board of the Public Building Commission.

3. Equal Employment Opportunity. In connection with the carrying out of this project, the contractor shall not discriminate against any employee or applicant for employment because of race, color, religion, sex, national origin, ancestry, disability, age or marital status. The Contractor will take affirmative action to ensure that applicants are employed, and that employees are treated during employment, without regard to their race, color, religion, sex, national origin, ancestry, disability, age or marital status. Such action shall include, but not be limited to, the following: employment, upgrading, demotion or transfer; recruitment or recruitment advertising; layoff or termination; rates of pay or other compensation; and selection for training, including apprenticeship.

4. E-Verify. In accordance with Neb. Rev. Stat. 4-108 through 4-114, the contractor agrees to register with and use a federal immigration verification system, to determine the work eligibility status of new employees performing services within the state of Nebraska. A federal immigration verification system means the electronic verification of the work authorization program of the Illegal Immigration Reform and Immigrant Responsibility Act of 1996, 8 U.S.C. 1324 a, otherwise known as the E-Verify Program, or an equivalent federal program designated by the United States Department of Homeland Security or other federal agency authorized to verify the work eligibility status of a newly hired employee pursuant to the Immigration Reform and Control Act of 1986. The Contractor shall not discriminate against any employee or applicant for employment to be employed in the performance of this section pursuant to the requirements of state law and 8 U.S.C.A 1324b. The contractor shall require any subcontractor to comply with the provisions of this section.

5. Termination. This Contract may be terminated by the following:
   - 5.1) Termination for Convenience. Either party may terminate this Contract upon thirty (30) days written notice to the other party for any reason without penalty.
   - 5.2) Termination for Cause. The Owners may terminate the Contract for cause if the Contractor:
     - 5.2.1) Refuses or fails to supply the proper labor, materials and equipment necessary to provide services and/or commodities.
     - 5.2.2) Disregards Federal, State or local laws, ordinances, regulations, resolutions or orders.
     - 5.2.3) Otherwise commits a substantial breach or default of any provision of the Contract Document. In the event of a substantial breach or default the Owners will provide the Contractor written notice of said breach or default and allow the Contractor ten (10) days from the date of the written notice to cure such breach or default. If said breach or default is not cured within ten (10) days from the date of notice, then the contract shall terminate.

6. Independent Contractor. It is the express intent of the parties that this contract shall not create an employer-employee relationship. Employees of the Contractor shall not be deemed to be employees of the Owners and employees of the Owners shall not be deemed to be employees of the Contractor. The Contractor and the Owners shall be responsible to their respective employees for all salary and benefits. Neither the Contractor's employees nor the Owners' employees shall be entitled to any salary, wages, or benefits from the other party, including but not limited to overtime, vacation, retirement benefits, workers' compensation, sick leave or injury leave. Contractor shall also be responsible for maintaining workers' compensation insurance, unemployment insurance for its employees, and for payment of all federal, state, local and any other payroll taxes with respect to its employees' compensation.

7. Owner Inclusion. It is understood and agreed by all parties that "Owner/s" shall include the City of Lincoln, Lancaster County, Nebraska and Lincoln-Lancaster County Public Building Commission. Whenever in the Contract documents, including the instructions to bidders, specifications, insurance requirements, bonds, and terms and conditions or any other documents which are a part of the Contract, a singular entity is referenced (i.e., "the City" or "the County" or "Building Commission") it shall mean the "Owners" encompassing the City of Lincoln, Lancaster County and Lincoln-Lancaster County Building Commission. Notwithstanding the foregoing, the duties and obligations of the City, the County, and the Building Commission pursuant to the Contract shall be treated as divisible and severable duties and obligations, and default by any one of the City, the County, or the Building Commission shall not be attributed to any other of the Owners, but shall remain the sole obligation of the defaulting entity.

8. Audit Provision: The Contractor shall be subject to an audit and shall, upon request, make available to the Public Building Commission or a contract auditor hired by the Public Service Commission, copies of all financial and performance related records and materials related to this Agreement, as allowed by law.

9. Period of Performance. This Contract shall be effective upon execution by all parties. The term of the Contract shall be a one (1) year term with the option to renew for three (3) additional one (1) year terms.

10. Notwithstanding anything contrary to the Contract Terms, the attached documents comprise the Contract, and consist of the following:
    1. Contract Terms
    2. Accepted Proposal/Response
    3. Insurance Certificate with Endorsements
    4. Unit Price Quote Sheet
    5. Specifications
    6. Instructions to Bidders
    7. Insurance Requirements
    8. Sales Tax Exemption Form 13
       (Note: This form cannot be used for the WATER Division of the City of Lincoln. The WATER Division is taxable per Reg. 066.14A or applicable laws.)
    9. Notice to Bidders

The herein above mentioned Contract Documents form this Contract and are a part of the Contract as if hereto attached. Said documents which are not attached to this document may be viewed at: lincoln.ne.gov - Keyword: Bid - Awarded or Closed bids.
.

The Contractor and the Owners hereby agree that all the terms and conditions of this Contract shall be binding upon themselves, and their heirs, administrators, executors, legal and personal representatives, successors, and assigns.

IN WITNESS WHEREOF, the Contractor and the Owners do hereby execute this contract upon completion of signatures on:

Vendor Signature Page
City of Lincoln Signature Page
Lancaster County Signature Page
City of Lincoln-Lancaster County Public Building Commission Signature Page

Vendor Signature Page

CONTRACT
Unit Price
Carpet / Upholstery Cleaning
Bid No. 20-154
City of Lincoln, Nebraska, Lancaster County,
City of Lincoln - Lancaster County Public Building Commission
Supersteam

EXECUTION BY CONTRACTOR

IF A CORPORATION:

Attest:

_____ Seal
Secretary

_____
Name of Corporation

_____
Address

By: _____
Duly Authorized Official

_____
Legal Title of Official

IF OTHER TYPE OF ORGANIZATION:

_____
Name of Organization

_____
Type of Organization

_____
Address

By: _____
Member

By: _____
Member

IF AN INDIVIDUAL:

_____
Name

_____
Address

_____
Signature

City of Lincoln Signature Page

CONTRACT
Unit Price
Carpet / Upholstery Cleaning
Bid No. 20-154
City of Lincoln, Nebraska, Lancaster County,
City of Lincoln - Lancaster County Public Building Commission
Supersteam

EXECUTION BY THE CITY OF LINCOLN, NEBRASKA

ATTEST:

_____
City Clerk

CITY OF LINCOLN, NEBRASKA

_____
Director, Finance

Approved by Directorial Order No._____

dated _____

Lancaster County Signature Page

CONTRACT
Unit Price
Carpet / Upholstery Cleaning
Bid No. 20-154
City of Lincoln, Nebraska, Lancaster County,
City of Lincoln - Lancaster County Public Building Commission
Supersteam

EXECUTION BY LANCASTER COUNTY, NEBRASKA

Contract Approved as to Form:

_____
Deputy Lancaster County Attorney

The Board of County Commissioners of Lancaster, Nebraska

_____

_____

_____

_____

_____

dated _____

Lincoln-Lancaster County Public Building Commission
Signature Page

CONTRACT
Unit Price
Carpet / Upholstery Cleaning
Bid No. 20-154
City of Lincoln, Nebraska, Lancaster County,
City of Lincoln - Lancaster County Public Building Commission
Supersteam

EXECUTION BY LINCOLN-LANCASTER COUNTY PUBLIC BUILDING COMMISSION

ATTEST:

_____ _____
Public Building Commission Attorney Chairperson, Public Building Commission

dated _____

20-154
Supersteam
Supplier Response

Event Information

Number: 20-154
Title: Unit Price - Carpet / Upholstery Cleaning
Type: Notice to Bidders
Issue Date: 6/24/2020
Deadline: 7/10/2020 12:00 PM (CT)
Notes:

Contact Information

Contact: Sharon Mulder Asst Purchasing Agent
Address: Suite 200
Purchasing
440 S. 8th St.
Lincoln, NE 68508
Phone: (402) 441-7428
Fax: (402) 441-6513
Email: smulder@lincoln.ne.gov

Supersteam Information

Contact: Wendy Collicott-Witthoff
Address: 2500 South St
Lincoln, NE 68502-3049
Phone: (402) 488-0007
Email: supersteam1@yahoo.com

By submitting your response, you certify that you are authorized to represent and bind your company.

Wendy Witthoff
Signature

supersteam1@yahoo.com
Email

Submitted at 7/10/2020 7:29:40 AM

Supplier Note

We would like to keep the contract with the libraries exactly the way we have it now. No price changes. I randomly found this bid in my spam folder this am. so glad I had to check in there today we don't want to loose this contract!!

Bid Attributes

1	**Instructions to Bidders** I acknowledge reading and understanding the Instructions to Bidders. Yes
2	**Insurance Requirements and Endorsements** Vendor agrees to provide insurance coverage for each checked box on the Insurance Clause document in the Bid Attachments including the submission of the Certificate of ACORD and the applicable endorsements. Insurance Certificate and required Endorsements are required at time of contract execution by the vendor. **Vendors are strongly encouraged to send the insurance requirements and endorsement information to their insurance agent prior to bid close in order to expedite the contract execution process.** Yes
3	**Specifications** I acknowledge reading and understanding the specifications. Yes
4	**Sample Contract** I acknowledge reading and understanding the sample contract. Yes
5	**Special Provision Term Contract Provisions** I acknowledge reading and understanding the Special Provision Term Contract Provisions. Yes

6	**Term Clause of Contract** I acknowledge that the term of the contract is for a one (1) year term with the option for three (3) additional one (1) year renewals from the date of the executed contract. (a) Are your bid prices firm for the first one (1) year contract period. YES or NO (b) Are your bid prices subject to escallation/de-escalation YES or NO (c) If (b), state period for which prices will remain firm: through _____ yes,no, price staying the same as before
7	**Contact** Name of person submitting this bid: Wendy Witthoff VP Supersteam
8	**Purchase Order, Contract and Delivery Contact** The City/County Purchasing Department issues Purchase Orders and Contracts via email to a designated contact person of the awarded Vendor. This designee will be the primary contact with the department through the delivery of the product/services. Please list the name, email address and phone number of the person who will be the contact person for the contract/PO to be awarded. Wendy Witthoff Supersteam1@yahoo.com 402-488-0007
9	**Percentage Markup of Material, excluding freight** Percentage Markup of Material, Excluding Freight. ONLY ENTER A NUMBER IN THE SPACE PROVIDED! An invoice showing the material type AND cost of material from 3rd Party Vendor may be requested with the final invoice to verify quoted price. 0%
10	**Percentage Markup of Rental Equipment** Percentage Markup of Rental Equipment. ONLY ENTER A NUMBER IN THE SPACE PROVIDED! An invoice showing the type of equipment AND cost of rental from 3rd Party Vendor may be requested with the final invoice to verify quoted price. 0%
11	**Percentage Markup of all Subcontractors Cost** Percentage Markup of Sucontractor Costs. ONLY ENTER A NUMBER IN THE SPACE PROVIDED! An invoice showing the amount charged by Subcontractor may be requested with the final invoice to verify quoted price. 0%
12	**Method to be utilized for cleaning of upholstered furniture** Please state the method to be utilized for cleaning of upholstered furniture. truck mounted steam eq

13

Emergency Services

Is your company willing and able to provide emergency services at any time of the day or night? YES or NO _____

If YES, please list the contact person and phone number for these services: _____

If you are willing to provide emergency services, will your rate change from what is listed in the Line Items? YES or NO _____

If YES, please provide the rate increase by a percentage or attach on Company letterhead the specific rate for each Line Item.

Emergency services are defined as those services which are specifically required after normal business hours (5:00pm - 7:00am). The City will not allow added cost when the Vendors time is outside the normal business hours due to scheduling issues with the Vendor.

yes wendy witthoff 402-488-0007

14

References

I have attached my References to the Response Attachment section of this bid.

Yes

15

Bid Documents

I acknowledge and accept that it is my responsibility as a Bidder to promptly notify the Purchasing Department Staff prior to the close of the bid of any ambiguity, inconsistency or error which I may discover upon examination of the bid documents including, but not limited to the Specifications.

Yes

16

Bid award

I acknowledge and understand that the City, County and/or Public Building Commission reserves the right to award bids item-by-item, with or without alternates/options, by groups, or "lump sum" such as shall best serve the requirements and interests of the City, County and/or Public Building Commission.

If your pricing is based on an all-or-nothing basis, please indicate so in the Supplier Notes section of your E-Bid response.

Yes

17

Tax Exempt Certification Forms

Materials being purchased in this bid are tax exempt and unit prices are reflected as such. A Purchasing Agent Appointment form and a Exempt Sales Certificate form shall be issued with contract documents. (Note: State Tax Law does not provide for sales tax exemption for proprietary functions for government, thereby excluding the purchases of pipes to be installed in water lines and purchase of water meters.)

Yes

18 U.S. Citizenship Attestation

Is your company legally considered an Individual or Sole Proprietor: YES or NO

As a Vendor who is legally considered an Individual or a Sole Proprietor I hereby understand and agree to comply with the requirements of the United States Citizenship Attestation Form, available at: http://www.sos.ne.gov/business/notary/citizenforminfo.html

All awarded Vendors who are legally considered an Individual or a Sole Proprietor must complete the form and submit it with contract documents at time of execution.

If a Vendor indicates on such attestation form that he or she is a qualified alien, the Vendor agrees to provide the US Citizenship and Immigration Services documentation required to verify the Vendor's lawful presence in the United States using the Systematic Alien Verification for Entitlements (SAVE) Program.

Vendor further understands and agrees that lawful presence in the United States is required and the Vendor may be disqualified or the Contract terminated if such lawful presence cannot be verified as required by Neb. Rev. Stat. 4-108.

no we are an LLC but we are the sole proprietors. aka owner operators

19 Electronic Signature

Please check here for your electronic signature.

Yes

Bid Lines

1 Carpet Cleaning per Square Yard

Quantity: 1 UOM: Sq Yd Unit Price: $0.06 Total: $0.06

Item Notes:

All costs of material & labor shall be included in the square yard cost.

2 Water Damage

Quantity: 1 UOM: Hour Unit Price: $200.00 Total: $200.00

Item Notes:

All costs of material & labor shall be included in the hourly cost.

3 Upholstery and Cubicle Panel Cleaning

Quantity: 1 UOM: Hour Unit Price: $50.00 Total: $50.00

Item Notes:

The cost per piece will be determined between the Service provider and the owner before work is to begin.

4 Carpet Deodorizing per Square Yard

Quantity: 1 UOM: Sq Yd Unit Price: $0.06 Total: $0.06

Item Notes:

The cost per square yard to include deodorizing

Response Total: $250.12

AMENDMENT TO CONTRACT
Annual Supply
Workstations and Accessories
Bid No. 17-140
City of Lincoln, Lancaster County and
City of Lincoln-Lancaster County Public Building Commission
Renewal with Price Increase & Revision of New Workstations
AOI

This Amendment is hereby entered into by and between AOI, 8320 Cody Drive, Lincoln, NE 68512 (hereinafter "Contractor") and the City of Lincoln, Lancaster County and the City of Lincoln-Lancaster County Public Building Commission (hereinafter "Owners"), for the purpose of amending the Contract dated August 10, 2017 executed under City Directorial Order No. 17628, and County Contract C-17-0645, dated August 15, 2017, and executed by the City of Lincoln-Lancaster County Public Building Commission, on September 12, 2017, for Annual Supply - Workstations and Accessories, Bid No. 17-140, which is made a part of this amendment by this reference.

WHEREAS, the original term of the Contract is September 12, 2017 through September 11, 2018, with the option to renew for three (3) additional one (1) year terms upon written mutual consent by all parties; and

WHEREAS, the Contract was amended by City Executive Order No. 92265, executed by the City on September 10, 2018, and by County Contract C-18-0538 executed by the County Board on September 11, 2018, and executed by the City of Lincoln-Lancaster County Public Building Commission on September 18, 2018, to renew the contract for an additional one (1) year term from September 12, 2018 through September 11, 2019; and

WHEREAS, the Contract was amended by City Executive Order No. 93591, executed by the City on September 16, 2019, and by County Contract C-19-0689 executed by the County Board on September 10, 2019, and executed by the City of Lincoln-Lancaster County Public Building Commission on September 17, 2019, to renew the contract for an additional one (1) year term from September 12, 2019 through September 11, 2020; and

WHEREAS, the parties hereby renew the Contract for an additional one (1) year term beginning September 12, 2020 through September 11, 2021; and

WHEREAS, the parties hereby amend the Contract to reflect revision of new workstations and price increase as listed per Attachment A; and

WHEREAS, the expenditures for the City of Lincoln for the term of this renewal shall not exceed $10,000.00 without approval by the City of Lincoln; and

WHEREAS, the expenditures for Lancaster County for the term of this renewal shall not exceed $8,000.00 without approval by the Lancaster County Board; and

WHEREAS, the expenditures for the City of Lincoln-Lancaster County Public Building Commission for the term of this renewal shall not exceed $500.00 without approval by the Public Building Commission; and

NOW, THEREFORE, IN CONSIDERATION of the mutual covenants contained in the Contract under City Directorial Order No. 17628 and County Contract C-17-0645, all amendments thereto, and as stated herein, the parties agree as follows:

1) The parties hereby renew the Contract for an additional one (1) year term beginning September 12, 2020 through September 11, 2021.

2) The parties hereby amend the Contract to reflect revision of new workstations and price increase as listed per Attachment A.
3) The expenditures for the City of Lincoln for the term of this renewal shall not exceed $10,000.00 without approval by the City of Lincoln.
4) The expenditures for Lancaster County for the term of this renewal shall not exceed $8,000.00 without approval by the Lancaster County Board.
5) The expenditures for the City of Lincoln-Lancaster County Public Building Commission for the term of this renewal shall not exceed $500.00 without approval by the Public Building Commission.
6) All other terms of the Contract, not in conflict with this Amendment, shall remain in force and effect.

The Parties do hereby agree to all the terms and conditions of this Amendment. This Amendment shall be binding upon the parties, their heirs, administrators, executors, legal and personal representatives, successors, and assigns.

IN WITNESS WHEREOF, the Parties do hereby execute this Amendment upon completion of signatures on:

Vendor Signature Page
City of Lincoln Signature Page
Lancaster County Signature Page
City of Lincoln-Lancaster County Public Building Commission Signature Page

Vendor Signature Page

AMENDMENT TO CONTRACT
Annual Supply
Workstations and Accessories
Bid No. 17-140
City of Lincoln, Lancaster County and
City of Lincoln-Lancaster County Public Building Commission
Renewal with Price Increase & Revision of New Workstations
AOI

Please sign, date and return within 5 days of receipt.

Mail to: City/County Purchasing
Attn: Sandy Rocke
440 So. 8th St., Ste. 200
Lincoln, NE 68508
Or email to: srocke@lincoln.ne.gov

Company Name:	AOI Corporation
By: (Please Sign)	Rebecca Costello
By: (Please Print)	Rebecca Costello
Title:	VP Furniture Sales
Company Address:	8320 Cody Drive, Lincoln NE 68512
Company Phone & Fax:	P: 402-476-0055 F: 402-896-9445
E-Mail Address:	mrossman@aoicorp.com
Date:	08/17/2020
Contact Person for Orders or Service	Megan Rossman Beck
Contact Phone Number:	402-476-0055

City of Lincoln Signature Page

AMENDMENT TO CONTRACT
Annual Supply
Workstations and Accessories
Bid No. 17-140
City of Lincoln, Lancaster County and
City of Lincoln-Lancaster County Public Building Commission
Renewal with Price Increase & Revision of New Workstations
AOI

EXECUTION BY THE CITY OF LINCOLN, NEBRASKA

ATTEST:

_____
City Clerk

CITY OF LINCOLN, NEBRASKA

_____
Leirion Gaylor Baird, Mayor

Approved by Executive Order No._____

dated _____

Lancaster County Signature Page

AMENDMENT TO CONTRACT
Annual Supply
Workstations and Accessories
Bid No. 17-140
City of Lincoln, Lancaster County and
City of Lincoln-Lancaster County Public Building Commission
Renewal with Price Increase & Revision of New Workstations
AOI

EXECUTION BY LANCASTER COUNTY, NEBRASKA

Contract Approved as to Form:

_____
Deputy Lancaster County Attorney

The Board of County Commissioners of
Lancaster, Nebraska

_____

_____

_____

_____

_____

dated _____

City of Lincoln-Lancaster County Public Building Commission
Signature Page

AMENDMENT TO CONTRACT
Annual Supply
Workstations and Accessories
Bid No. 17-140
City of Lincoln, Lancaster County and
City of Lincoln-Lancaster County Public Building Commission
Renewal with Price Increase & Revision of New Workstations
AOI

EXECUTION BY LINCOLN-LANCASTER COUNTY PUBLIC BUILDING COMMISSION

ATTEST:

_____ _____
Public Building Commission Attorney Chairperson, Public Building Commission

dated _____

AOI
Furniture Proposal

Quote Number	12249
Project Number	
Date	07/28/2020
Customer PO Number	
Customer Account	CITLIN
Account Manager	Megan Rossman
Page	1 of 13

BILL TO

City of Lincoln
555 S 10 St
AP / AR
Lincoln, NE 68508

ATTN: Rachelle Hinze
Phone: 402-441-8313
Email: rhinze@lincoln.ne.gov

INSTALL AT

City of Lincoln
555 S 10 St
AP / AR
Lincoln, NE 68508

ATTN: Rachelle Hinze
Phone: 402-441-8313
Email: rhinze@lincoln.ne.gov

Pricing Based on Current Price Lists as of 7/28/2020.

Line	Quantity	Description	Unit Price	Extended Amount
1	1.00 Each	D&I-AOI Installation LABOR Labor to receive, deliver, and install 1-Height Adjustable Table	180.00	180.00
2	1.00 Each	D&I-AOI Installation LABOR Labor to receive, deliver, and install 1-Sit to Stand Workstation	180.00	180.00
3	1.00 Each	D&I-AOI Installation LABOR Labor to receive, deliver, and install 1-Monitor Arm	90.00	90.00
4	1.00 Each	D&I-AOI Installation LABOR Labor to receive, deliver, and install 1-Keyboard Tray	90.00	90.00
5	1.00 Each	D&I-AOI Installation LABOR Labor to receive, deliver, and install 1-Wall-Mounted Tech Station	180.00	180.00
6	1.00 Each	D&I-AOI Installation LABOR Deliver and install 2 Leg Height Adjustable Base to Existing Work Surface. Includes cutting surface, and reassembly	270.00	270.00
7	1.00 Each	D&I-AOI Installation LABOR deliver and install 3 leg height adjustable base to existing work surface. Includes cutting and reassembly	360.00	360.00
8	1.00 Each	Herman Miller DU7A.E24C--NNP-SUD-G2-57 @Renew Table Base Kit - 2 Legs, Elec Std Range, 24D, C Foot OPTION: NNP:@no power access OPTION: SUD:@simple up down OPTION: G2:@graphite satin leg with graphite satin foot OPTION: 57:@glides Mark Line For: Hgt Adj Base	1,033.60	1,033.60
9	1.00	Herman Miller	1,033.60	1,033.60

AOI
Furniture Proposal

Quote Number	12249
Project Number	
Date	07/28/2020
Customer PO Number	
Customer Account	CITLIN
Account Manager	Megan Rossman
Page	2 of 13

	Each	DU7A.E30C--NNP-SUD-G2-57 @Renew Table Base Kit - 2 Legs, Elec Std Range, 30D, C Foot OPTION: NNP:@no power access OPTION: SUD:@simple up down OPTION: G2:@graphite satin leg with graphite satin foot OPTION: 57:@glides Mark Line For: Hgt Adj Base		
10	1.00 Each	Herman Miller DV7AT.24E1--STS-G1-57 @Ht Adj Base Kit w/ T-Foot,24" d (23" surf size),electric st OPTION: STS:@simple up/down touch switch OPTION: G1:@graphite leg with graphite foot OPTION: 57:@glides Mark Line For: Hgt Adj Base 2448	665.38	665.38
11	1.00 Each	Herman Miller DV7AT.24E1--STS-G1-57 @Ht Adj Base Kit w/ T-Foot,24" d (23" surf size),electric st OPTION: STS:@simple up/down touch switch OPTION: G1:@graphite leg with graphite foot OPTION: 57:@glides Mark Line For: Hgt Adj Base 2472	665.38	665.38
12	1.00 Each	Herman Miller FV696.48 +Stiffener, 48W Mark Line For: Hgt Adj Base 2472	27.00	27.00
13	1.00 Each	Herman Miller DV7AT.30E1--STS-G1-57 @Ht Adj Base Kit w/ T-Foot,30" d (29" surf size),electric st OPTION: STS:@simple up/down touch switch OPTION: G1:@graphite leg with graphite foot OPTION: 57:@glides Mark Line For: Hgt Adj Base 3048	677.92	677.92
14	1.00 Each	Herman Miller DV7AT.30E1--STS-G1-57 @Ht Adj Base Kit w/ T-Foot,30" d (29" surf size),electric st OPTION: STS:@simple up/down touch switch OPTION: G1:@graphite leg with graphite foot OPTION: 57:@glides Mark Line For: Hgt Adj Base 3072	677.92	677.92
15	1.00 Each	Herman Miller FV696.48 +Stiffener, 48W Mark Line For: Hgt Adj Base 3072	27.00	27.00
16	1.00 Each	Herman Miller DU6ACS.2448LE--NNP-SUD-98-98-G2-PSC-NNN-57 @Renew Rect Tbl, C-Foot,Sq-Edge,Lam Top/Thermo Edge,Elec Std	1,144.18	1,144.18

AOI
Furniture Proposal

Quote Number	12249
Project Number	
Date	07/28/2020
Customer PO Number	
Customer Account	CITLIN
Account Manager	Megan Rossman
Page	3 of 13

		OPTION: NNP:@no power access OPTION: SUD:@simple up down OPTION: 98:@studio white OPTION: 98:@studio white OPTION: G2:@graphite satin leg with graphite satin foot OPTION: PSC:@simple cable OPTION: NNN:@no cutout OPTION: 57:@glides Mark Line For: Hgt Adj Table		
17	1.00 Each	Herman Miller DU6ACS.2472LE--NNP-SUD-98-98-G2-PSC-NNN-57 @Renew Rect Tbl, C-Foot,Sq-Edge,Lam Top/Thermo Edge,Elec Std OPTION: NNP:@no power access OPTION: SUD:@simple up down OPTION: 98:@studio white OPTION: 98:@studio white OPTION: G2:@graphite satin leg with graphite satin foot OPTION: PSC:@simple cable OPTION: NNN:@no cutout OPTION: 57:@glides Mark Line For: Hgt Adj Table	1,248.68	1,248.68
18	1.00 Each	Herman Miller DU6ACS.3048LE--NNP-SUD-98-98-G2-PSC-NNN-57 @Renew Rect Tbl, C-Foot,Sq-Edge,Lam Top/Thermo Edge,Elec Std OPTION: NNP:@no power access OPTION: SUD:@simple up down OPTION: 98:@studio white OPTION: 98:@studio white OPTION: G2:@graphite satin leg with graphite satin foot OPTION: PSC:@simple cable OPTION: NNN:@no cutout OPTION: 57:@glides Mark Line For: Hgt Adj Table	1,201.56	1,201.56
19	1.00 Each	Herman Miller DU6ACS.3072LE--NNP-SUD-98-98-G2-PSC-NNN-57 @Renew Rect Tbl, C-Foot,Sq-Edge,Lam Top/Thermo Edge,Elec Std OPTION: NNP:@no power access OPTION: SUD:@simple up down OPTION: 98:@studio white OPTION: 98:@studio white OPTION: G2:@graphite satin leg with graphite satin foot OPTION: PSC:@simple cable OPTION: NNN:@no cutout OPTION: 57:@glides Mark Line For: Hgt Adj Table	1,275.28	1,275.28
20	1.00 Each	Herman Miller DV6ATS.2448L04E1--STS-98-98-G1-N-NC-57	760.38	760.38

AOI
Furniture Proposal

Quote Number	12249
Project Number	
Date	07/28/2020
Customer PO Number	
Customer Account	CITLIN
Account Manager	Megan Rossman
Page	4 of 13

		@Motia Rect Table w/T-Foot, Sq-Edge, Lam Top/TP Edge, 1 1/4 OPTION: STS:@simple up/down touch switch OPTION: 98:@studio white OPTION: 98:@studio white OPTION: G1:@graphite OPTION: N:@no cable trough OPTION: NC:@no cutout OPTION: 57:@glides Mark Line For: Hgt Adj Table 2448		
21	1.00 Each	Herman Miller DV6ATS.2472L04E1--STS-98-98-G1-N-NC-57 @Motia Rect Table w/T-Foot, Sq-Edge, Lam Top/TP Edge, 1 1/4 OPTION: STS:@simple up/down touch switch OPTION: 98:@studio white OPTION: 98:@studio white OPTION: G1:@graphite OPTION: N:@no cable trough OPTION: NC:@no cutout OPTION: 57:@glides Mark Line For: Hgt Adj Table 2472	851.96	851.96
22	1.00 Each	Herman Miller DV6ATS.3048L04E1--STS-98-98-G1-N-NC-57 @Motia Rect Table w/T-Foot, Sq-Edge, Lam Top/TP Edge, 1 1/4 OPTION: STS:@simple up/down touch switch OPTION: 98:@studio white OPTION: 98:@studio white OPTION: G1:@graphite OPTION: N:@no cable trough OPTION: NC:@no cutout OPTION: 57:@glides Mark Line For: Hgt Adj Table 3048	806.74	806.74
23	1.00 Each	Herman Miller DV6ATS.3072L04E1--STS-98-98-G1-N-NC-57 @Motia Rect Table w/T-Foot, Sq-Edge, Lam Top/TP Edge, 1 1/4 OPTION: STS:@simple up/down touch switch OPTION: 98:@studio white OPTION: 98:@studio white OPTION: G1:@graphite OPTION: N:@no cable trough OPTION: NC:@no cutout OPTION: 57:@glides Mark Line For: Hgt Adj Table 3072	920.74	920.74
24	1.00 Each	Herman Miller Y7737.2K--0H +LS Series Keyboard Solutions, 19 Inch Track, 27" HDPE Tray OPTION: 0H:+black Mark Line For: Keyboard Tray	199.92	199.92

AOI
Furniture Proposal

Quote Number	12249
Project Number	
Date	07/28/2020
Customer PO Number	
Customer Account	CITLIN
Account Manager	Megan Rossman
Page	5 of 13

25	1.00 Each	Herman Miller Y7741.2K--0H @TL Series Keyboard Solutions, 19 Track, 27" HDPE Tray OPTION: 0H:@black Mark Line For: Keyboard Tray	215.22	215.22
26	1.00 Each	Herman Miller Y91175.CM--0I +Flo Dual-Screen Monitor Arm - Surface Clamp Mount OPTION: 0I:+silver Mark Line For: Monitor Arm-Dual	403.92	403.92
27	1.00 Each	Herman Miller Y91180.152CM--0I @Flo Modular Monitor Arm Assembly,15-3/4H Post,2 Arms,Surf C OPTION: 0I:@silver Mark Line For: Monitor Arm-Dual	482.46	482.46
28	1.00 Each	Herman Miller Y91174.2CM--0I @Flo Plus Monitor Arm Assembly, Flo Plus Dual, Clamp Mount OPTION: 0I:+silver Mark Line For: Monitor Arm-Dual	402.39	402.39
29	1.00 Each	Herman Miller Y91171.CM--0I +Flo Sngle-Screen Monitor Arm Support,Surf Clamp OPTION: 0I:+silver Mark Line For: Monitor Arm-Single	199.41	199.41
30	1.00 Each	Herman Miller Y7800.1--0H @Altissimo Prime Sit-to-Stand Workstation Arm, Single Monito OPTION: 0H:@black Mark Line For: Sit/Stand Workstation	514.59	514.59
31	1.00 Each	Herman Miller Y7800.2--0H @Altissimo Prime Sit-to-Stand Workstation Arm, Dual Monitor OPTION: 0H:@black Mark Line For: Sit/Stand Workstation	598.23	598.23
32	1.00 Each	Herman Miller Y94015.34--0J @Mbrace Wall-Mounted Technology, 34 Inches Long OPTION: 0J:@white Mark Line For: Wall-Mounted Tech Station	1,062.84	1,062.84
33	1.00 Each	Herman Miller Y94015.34--0J @Mbrace Wall-Mounted Technology, 34 Inches Long OPTION: 0J:@white Mark Line For: Wall-Mounted Tech Station	1,062.84	1,062.84

AOI
Furniture Proposal

Quote Number	12249
Project Number	
Date	07/28/2020
Customer PO Number	
Customer Account	CITLIN
Account Manager	Megan Rossman
Page	6 of 13

34	1.00 Each	Humanscale Corp 6G 900 90--H-G-22 6G Black Mechanism / 900 - Std. Platform / 90 - 8.5" Clip Mo OPTION: H:High Clip Mouse OPTION: G:19" Gel w/ Synt. Leather Cvr OPTION: 22:Std 21.625" Track Mark Line For: Keyboard Tray Group 1	174.49	174.49
35	1.00 Each	Humanscale Corp 6FB 500--G27-14 6FB Float Keyboard System Mechanism Black / 500 - Big Platfo OPTION: G27:27" Gel w/ Lycra OPTION: 14:14" Track Mark Line For: Keyboard Tray Group 1	139.22	139.22
36	1.00 Each	Humanscale Corp M81--C-B-1-W-~-~---- M8 Monitor Arm OPTION: C:Clamp Mount OPTION: B:Black w/ Black Trim OPTION: 1:Fixed Angled Link/Dynamic Link OPTION: W:Long Crossbar for 2 Monitors OPTION: ~:Standard 100mm x 100mm - also with 75x75 OPTION: ~:Standard packaging for orders of 3 or more OPTION: ---:No Selection Mark Line For: Monitor Arm-Dual Group 1	265.07	265.07
37	1.00 Each	Humanscale Corp MF2--2-B-2-2-C-12---~------ MFlex for M2 Arms OPTION: 2:Bracket for 2 Monitors OPTION: B:Black with Black Trim OPTION: 2:8" Straight Link/Dynamic Link OPTION: 2:8" Straight Link/Dynamic Link OPTION: C:Clamp Mount OPTION: 12:12"H Post (Single Row Only) OPTION: -:Std 100mm x 100mm(also used for 75mm x 75mm) OPTION: ~:No Post Stop OPTION: -:Standard packaging for orders of 3 or more OPTION: ---:No Selection Mark Line For: Monitor Arm-Dual Group 1	268.41	268.41
38	1.00 Each	Humanscale Corp M2--C-B-1-S-------- M2 Monitor Arm OPTION: C:Clamp Mount OPTION: B:Black with Black Trim	122.14	122.14

AOI
Furniture Proposal

Quote Number	12249
Project Number	
Date	07/28/2020
Customer PO Number	
Customer Account	CITLIN
Account Manager	Megan Rossman
Page	7 of 13

		OPTION: 1:Fixed Angled Link/Dynamic Link OPTION: S:Standard Ball Joint OPTION: -:Standard 100mm x 100mm - also with 75x75 OPTION: -:Standard packaging for orders of 3 or more OPTION: ---:No Selection Mark Line For: Monitor Arm-Single Group 1		
39	1.00 Each	Humanscale Corp M8--C-B-1-S-~-~---- M8 Monitor Arm OPTION: C:Clamp Mount OPTION: B:Black w/ Black Trim OPTION: 1:Fixed Angled Link/Dynamic Link OPTION: S:Standard Ball Joint OPTION: ~:Standard 100mm x 100mm - also with 75x75 OPTION: ~:Standard packaging for orders of 3 or more OPTION: ---:No Selection Mark Line For: Monitor Arm-Single Group 1	190.82	190.82
40	1.00 Each	Humanscale Corp 6G 900--90-G-22 6G Standard Black Mechanism, 900 - Std. Platform OPTION: 90:8.5â€? Clip OPTION: G:19" Gel w/ Synt. Leather Cvr OPTION: 22:Std 21.625" Track Mark Line For: Keyboard Tray 33 Group 1	174.49	174.49
41	1.00 Each	Humanscale Corp 6FB 500--G27-14 6FB Float Keyboard System Mechanism Black / 500 - Big Platfo OPTION: G27:27" Gel w/ Lycra OPTION: 14:14" Track Mark Line For: Keyboard Tray 34 Group 1	139.22	139.22
42	1.00 Each	Humanscale Corp M81--CM-B-B-2-B---- M8.1 Monitor Arm OPTION: CM:Two-Piece Clamp Mount with Base OPTION: B:Black with Black Trim OPTION: B:Angled Link/Dynamic Link OPTION: 2:Crossbar for 2 monitors OPTION: B:Standard 100mm x 100mm, black OPTION: ---:No Selection Mark Line For: Monitor Arm Dual 35	282.52	282.52

AOI
Furniture Proposal

Quote Number	12249
Project Number	
Date	07/28/2020
Customer PO Number	
Customer Account	CITLIN
Account Manager	Megan Rossman
Page	8 of 13

		Group 1		
43	1.00 Each	Humanscale Corp X2B--CM-B-E-T-B-E-T-B-12-NA M/Flex for M2.1 Monitor Arm, Dual Bracket for 2 Monitors OPTION: CM:Two-Piece Clamp Mount with Base OPTION: B:Black with Black Trim OPTION: E:8" Straight Link/Dynamic Link OPTION: T:Standard Monitor Tile (one per monitor) OPTION: B:Standard 100mm x 100mm, black OPTION: E:8" Straight Link/Dynamic Link OPTION: T:Standard Monitor Tile (one per monitor) OPTION: B:Standard 100mm x 100mm, black OPTION: 12:12" high Post OPTION: NA:North America Mark Line For: Monitor Arm Dual 36 Group 1	315.93	315.93
44	1.00 Each	Humanscale Corp M21--CM-B-B-T-B---- M2.1 Monitor Arm OPTION: CM:Two-Piece Clamp Mount with Base OPTION: B:Black with Black Trim OPTION: B:Angled Link/Dynamic Link OPTION: T:Standard Monitor Tilt (One per monitor) OPTION: B:Standard 100mm x 100mm, black OPTION: ---:No Selection Mark Line For: Monitor Arm-Single 37 Group 1	143.30	143.30
45	1.00 Each	Humanscale Corp M81--CM-B-B-T-B---- M8.1 Monitor Arm OPTION: CM:Two-Piece Clamp Mount with Base OPTION: B:Black with Black Trim OPTION: B:Angled Link/Dynamic Link OPTION: T:Standard Monitor Tilt (One per monitor) OPTION: B:Standard 100mm x 100mm, black OPTION: ---:No Selection Mark Line For: Monitor Arm-Single 38 Group 1	220.89	220.89
46	1.00 Each	Humanscale Corp FN--B-M-43-XXXXXXX Float Table OPTION: B:Black OPTION: M:Mounted OPTION: 43:For 48-54" Wide x 30" Deep Tops	943.97	943.97

AOI
Furniture Proposal

Quote Number	12249
Project Number	
Date	07/28/2020
Customer PO Number	
Customer Account	CITLIN
Account Manager	Megan Rossman
Page	9 of 13

		OPTION: XXXXXXX:No Top Selection Mark Line For: Hgt Adj Base 39 Group 2		
47	1.00 Each	Humanscale Corp FN--B-M-63-XXXXXXX Float Table OPTION: B:Black OPTION: M:Mounted OPTION: 63:For 60-72" Wide x 30" Deep Tops OPTION: XXXXXXX:No Top Selection Mark Line For: Hgt Adj Base 40 Group 2	968.83	968.83
48	1.00 Each	Humanscale Corp FLR--12-A1-T3-A-SL eFloat Lite for Rectangular Top OPTION: 12:Standard Range, 27" to 46", 200 lbs Capacity OPTION: A1:None - 1" thick surfaces + OPTION: T3:Slim 30" T Foot , Glides OPTION: A:Basic Up Down OPTION: SL:Silver Mark Line For: Hgt Adj Base 41 Group 2	497.09	497.09
49	1.00 Each	Humanscale Corp FN--B-M-43-3048-BL-F Float Table OPTION: B:Black OPTION: M:Mounted OPTION: 43:For 48-54" Wide x 30" Deep Tops OPTION: 3048:30"D x 48"W Laminate Top OPTION: BL:Black OPTION: F:Flat Edge Mark Line For: Hgt Adj Table 42 Group 2	1,155.24	1,155.24
50	1.00 Each	Humanscale Corp FN--B-M-43-3054-BL-F Float Table OPTION: B:Black OPTION: M:Mounted OPTION: 43:For 48-54" Wide x 30" Deep Tops OPTION: 3054:30"D x 54"W Laminate Top OPTION: BL:Black OPTION: F:Flat Edge Mark Line For: Hgt Adj Table	1,167.66	1,167.66

AOI
Furniture Proposal

Quote Number	12249
Project Number	
Date	07/28/2020
Customer PO Number	
Customer Account	CITLIN
Account Manager	Megan Rossman
Page	10 of 13

		43 Group 2		
51	1.00 Each	Humanscale Corp FN--B-M-63-3060-BL-F Float Table OPTION: B:Black OPTION: M:Mounted OPTION: 63:For 60-72" Wide x 30" Deep Tops OPTION: 3060:30"D x 60"W Laminate Top OPTION: BL:Black OPTION: F:Flat Edge Mark Line For: Hgt Adj Table 44 Group 2	1,204.95	1,204.95
52	1.00 Each	Humanscale Corp FN--B-M-63-3066-BL-F Float Table OPTION: B:Black OPTION: M:Mounted OPTION: 63:For 60-72" Wide x 30" Deep Tops OPTION: 3066:30"D x 66"W Laminate Top OPTION: BL:Black OPTION: F:Flat Edge Mark Line For: Hgt Adj Table 45 Group 2	1,214.89	1,214.89
53	1.00 Each	Humanscale Corp FN--B-M-63-3072-BL-F Float Table OPTION: B:Black OPTION: M:Mounted OPTION: 63:For 60-72" Wide x 30" Deep Tops OPTION: 3072:30"D x 72"W Laminate Top OPTION: BL:Black OPTION: F:Flat Edge Mark Line For: Hgt Adj Table 46 Group 2	1,234.77	1,234.77
54	1.00 Each	Humanscale Corp QS--B-H-30-F-N-N QuickStand (weight capacity up to 15.9kg (35lbs.) OPTION: B:Black OPTION: H:Heavy Monitor Mount (Single only up to 22lbs) OPTION: 30:30" Large Platform OPTION: F:Freestanding Base OPTION: N:No Cables OPTION: N:No Cables	653.18	653.18

AOI
Furniture Proposal

Quote Number	12249
Project Number	
Date	07/28/2020
Customer PO Number	
Customer Account	CITLIN
Account Manager	Megan Rossman
Page	11 of 13

		Mark Line For: Sit/Stand Workstation 57 Group 2		
55	1.00 Each	Humanscale Corp QS--B-C-30-F-N-N QuickStand (weight capacity up to 15.9kg (35lbs.) OPTION: B:Black OPTION: C:Std Crossbar Monitor Mount (Dual Scrn) OPTION: 30:30" Large Platform OPTION: F:Freestanding Base OPTION: N:No Cables OPTION: N:No Cables Mark Line For: Sit/Stand Workstation 58 Group 2	683.00	683.00
56	1.00 Each	Humanscale Corp QS--B-W-30-F-N-N QuickStand (weight capacity up to 15.9kg (35lbs.) OPTION: B:Black OPTION: W:Wide Crossbar Monitor Mount (Dual Scrn) OPTION: 30:30" Large Platform OPTION: F:Freestanding Base OPTION: N:No Cables OPTION: N:No Cables Mark Line For: Sit/Stand Workstation 59 Group 2	690.96	690.96
57	1.00 Each	Humanscale Corp QSL--B-H-C QUICKSTAND LITE BASE OPTION: B:Black OPTION: H:Heavy Mount for 1 Monitor from 12-22 lbs OPTION: C:Clamp Mount Mark Line For: Sit/Stand Workstation 60 Group 2	483.17	483.17
58	1.00 Each	Humanscale Corp QSL--B-W-C QUICKSTAND LITE BASE OPTION: B:Black OPTION: W:Wide Crossbar Mount for 2 Monitors up to 27"W OPTION: C:Clamp Mount Mark Line For: Sit/Stand Workstation 61 Group 2	520.95	520.95
59	1.00 Each	Symmetry 3072.TBT8.TZ2472--BF01-HC01-~	935.00	935.00

AOI
Furniture Proposal

Quote Number	12249
Project Number	
Date	07/28/2020
Customer PO Number	
Customer Account	CITLIN
Account Manager	Megan Rossman
Page	12 of 13

		Voyager - 3 Leg - Main Base For 24" Deep x 72" Wide Rectangu OPTION: BF01:Silver OPTION: HC01:Standard Up / Down Controller OPTION: ~:Mending Bracket Mark Line For: Symmetry 3 Leg Voyager Base Only Group 3		
60	1.00 Each	Symmetry 3162.TBT7.TZ2460--BF01-LS18 Switchback - 2 Leg T - Base - For Top Size 24x60 OPTION: BF01:Silver OPTION: LS18:Fixed / Glides Mark Line For: Symmetry 2 Leg Switch Back Base Only Group 3	420.00	420.00
			Order Sub-Total :	$34,719.30
			Total Order :	**$34,719.30**

PLEASE REVIEW THIS QUOTATION AND NOTIFY US PROMPTLY OF ANY CORRECTIONS REQUIRED

THANK YOU FOR THE OPPORTUNITY TO BE OF SERVICE

PRICING EXPIRES 30 DAYS FROM QUOTE DATE

All orders are subject to AOI Terms and Conditions.

Customer Signature

Date

Name

AOI
Furniture Proposal

Quote Number	12249
Project Number	
Date	07/28/2020
Customer PO Number	
Customer Account	CITLIN
Account Manager	Megan Rossman
Page	13 of 13

Terms And Conditions

- Standard payment terms are Net 10 days from invoice. A 50% deposit is required on all orders.
- A 3% convenience fee will be added to invoice if a credit card is used. Credit cards will be charged in full at time of order.
- Products are made to order. AOI Corporation offers no return or restocking programs. Products may be returned only with prior written approval of AOI Corporation and the product manufacturer.
- Client changes submitted after final plan approval, and resulting in additional work, will be billed at our hourly rate, or through a mutually agreed upon addendum to the contract.
- All labor estimates have been based on AOI Corporation having clear access and use of receiving docks for product deliveries. The receiving area should be free and clear of other trades and products to prevent any delays.
- AOI Corporation will have scheduled elevator access for transporting product within the building.
- Each area in which furniture will be installed, will be substantially free and clear of other trades allowing us to stage and build product according to plan.
- Storage fees will be assessed when delays require AOI Corporation to warehouse product thirty 30 days past the scheduled installation date.
- Labor fees will be assessed when delivery address changes from the client site to an alternative receiving location.
- AOI Corporation will accept installation change requests from authorized client representatives only. Any agreed upon changes will be billed on an hourly basis, and invoiced monthly.
- Unless otherwise stated, all quoted installation work to be performed during normal business, Monday through Friday.
- Construction flaws effecting furniture installation will be reviewed as they are encountered.
- AOI Corporation is responsible for general cleaning of workstations following installation. This does not include excessive construction debris (i.e. drywall dust) resulting from construction work still in progress in the build areas.
- AOI Corporation is not responsible for product damage resulting from deliveries received directly by client representatives. AOI does not file freight claims on products drop shipped to a customer location.
- AOI may charge, and the Customer shall pay, taxes which AOI is required to collect and remit by law in connection with any sale. Customer shall pay unless AOI has received, in advance of the initial delivery, sufficient written documentation form Customer establishing exemption from such tax(es).
- Pricing expires 30 days from proposal date.
- All designs, plans, drawings, specifications, samples, and the contents there in regarding this sale shall remain the property of AOI, and may not be used, reproduced or distributed without express written permission of AOI

Gmail

Nancy Kraft <nancy.kraft@oidinc.com>

July 1, 2019 Price Increase

1 message

ESI <marketing@esiergo.com>
Reply-To: marketing@esiergo.com
To: nancy.kraft@oidinc.com

Fri, May 31, 2019 at 6:19 PM

Email not displaying correctly? View it in your browser.

May 31, 2019

To All ESI Customers:

Effective May 10, 2019, the proposed changes to US government trade policies went into effect in the form of a 15% tariff increase (in addition to the previous 10% increase in September 2018) on components and finished goods coming from China.

Effective July 1, 2019, ESI will implement a 5% list price increase to all products with the exception of the following, which will not have a price increase:

- Motific mobile tech table
- Brisa height adjustable table
- New worksurface program

Any orders that are received and acknowledged on or before June 30, 2019 will not be affected by the list price increase.

The digital version of the V31 January 2019 catalog will be updated on July 1. The printed version will have a sticker applied to the cover that explains the price increase.

Freight Terms Update
ESI is simplifying our freight terms from multiple policies into one all-encompassing program. Effective immediately, any orders more than $250 list will now have free freight. All orders $250 list or less will incur a flat fee of $25.

Please contact Customer Service at 800-833-3746 with any questions you may have.

Thank you for your continued support.

© 2019 Fellowes Inc. All rights reserved.

Our mailing address is:

ESI
4030 E. Quenton Drive
Mesa, Arizona 85215

unsubscribe from all emails update subscription preferences

CERTIFICATE OF LIABILITY INSURANCE

DATE (MM/DD/YYYY): 7/31/2020

THIS CERTIFICATE IS ISSUED AS A MATTER OF INFORMATION ONLY AND CONFERS NO RIGHTS UPON THE CERTIFICATE HOLDER. THIS CERTIFICATE DOES NOT AFFIRMATIVELY OR NEGATIVELY AMEND, EXTEND OR ALTER THE COVERAGE AFFORDED BY THE POLICIES BELOW. THIS CERTIFICATE OF INSURANCE DOES NOT CONSTITUTE A CONTRACT BETWEEN THE ISSUING INSURER(S), AUTHORIZED REPRESENTATIVE OR PRODUCER, AND THE CERTIFICATE HOLDER.

IMPORTANT: If the certificate holder is an ADDITIONAL INSURED, the policy(ies) must have ADDITIONAL INSURED provisions or be endorsed. If SUBROGATION IS WAIVED, subject to the terms and conditions of the policy, certain policies may require an endorsement. A statement on this certificate does not confer rights to the certificate holder in lieu of such endorsement(s).

PRODUCER
The Harry A. Koch Co.
P.O. Box 45279
Omaha NE 68145-0279

CONTACT NAME:
PHONE (A/C, No, Ext): 402-861-7000
FAX (A/C, No):
E-MAIL ADDRESS:

INSURER(S) AFFORDING COVERAGE	NAIC #
INSURER A : Charter Oak Fire Insurance Co.	25615
INSURER B : The Phoenix Insurance Co	25623
INSURER C : Travelers Indemnity Company of America	25666
INSURER D : Travelers Property Casualty of America	25674
INSURER E :	
INSURER F :	

INSURED
AOI Corporation
8801 South 137th Circle
Omaha NE 68138-3455

ADV24845

COVERAGES **CERTIFICATE NUMBER:** 258299296 **REVISION NUMBER:**

THIS IS TO CERTIFY THAT THE POLICIES OF INSURANCE LISTED BELOW HAVE BEEN ISSUED TO THE INSURED NAMED ABOVE FOR THE POLICY PERIOD INDICATED. NOTWITHSTANDING ANY REQUIREMENT, TERM OR CONDITION OF ANY CONTRACT OR OTHER DOCUMENT WITH RESPECT TO WHICH THIS CERTIFICATE MAY BE ISSUED OR MAY PERTAIN, THE INSURANCE AFFORDED BY THE POLICIES DESCRIBED HEREIN IS SUBJECT TO ALL THE TERMS, EXCLUSIONS AND CONDITIONS OF SUCH POLICIES. LIMITS SHOWN MAY HAVE BEEN REDUCED BY PAID CLAIMS.

INSR LTR	TYPE OF INSURANCE	ADDL INSD	SUBR WVD	POLICY NUMBER	POLICY EFF (MM/DD/YYYY)	POLICY EXP (MM/DD/YYYY)	LIMITS	
A	X COMMERCIAL GENERAL LIABILITY			CO5355R886	8/6/2020	8/6/2021	EACH OCCURRENCE	$ 1,000,000
	CLAIMS-MADE X OCCUR						DAMAGE TO RENTED PREMISES (Ea occurrence)	$ 300,000
	X 2500						MED EXP (Any one person)	$ 10,000
							PERSONAL & ADV INJURY	$ 1,000,000
	GEN'L AGGREGATE LIMIT APPLIES PER:						GENERAL AGGREGATE	$ 2,000,000
	X POLICY X PRO-JECT LOC						PRODUCTS - COMP/OP AGG	$ 2,000,000
	OTHER:							$
B	AUTOMOBILE LIABILITY			8103N060618	8/6/2020	8/6/2021	COMBINED SINGLE LIMIT (Ea accident)	$ 1,000,000
	X ANY AUTO						BODILY INJURY (Per person)	$
	OWNED AUTOS ONLY / SCHEDULED AUTOS						BODILY INJURY (Per accident)	$
	HIRED AUTOS ONLY / NON-OWNED AUTOS ONLY						PROPERTY DAMAGE (Per accident)	$
								$
D	X UMBRELLA LIAB X OCCUR			CUP8N553070	8/6/2020	8/6/2021	EACH OCCURRENCE	$ 9,000,000
	EXCESS LIAB CLAIMS-MADE						AGGREGATE	$ 9,000,000
	DED X RETENTION $ 10000							$
C	WORKERS COMPENSATION AND EMPLOYERS' LIABILITY			UB8K467132	8/6/2020	8/6/2021	X PER STATUTE OTH-ER	
	ANYPROPRIETOR/PARTNER/EXECUTIVE OFFICER/MEMBER EXCLUDED? Y / N: N (Mandatory in NH)	N / A					E.L. EACH ACCIDENT	$ 1,000,000
	If yes, describe under DESCRIPTION OF OPERATIONS below						E.L. DISEASE - EA EMPLOYEE	$ 1,000,000
							E.L. DISEASE - POLICY LIMIT	$ 1,000,000

DESCRIPTION OF OPERATIONS / LOCATIONS / VEHICLES (ACORD 101, Additional Remarks Schedule, may be attached if more space is required)
City of Lincoln &/or Lancaster County &/or City of Lincoln/Lancaster County Public Building Commission
are additional insured for general liability, including products and completed operations, and auto liability if required by written contract executed prior to loss.
The general liability, auto, and workers' compensation policies have been endorsed to provide 30 days notice of cancellation, except for cancellation for nonpayment of premium, in which case 10 days notice of cancellation will be provided.
Waiver of Subrogation applies for workers compensation if required by written contract executed prior to loss.

CERTIFICATE HOLDER

City of Lincoln &/or Lancaster County &/or City of Lincoln/Lancaster County Public Building Commission
555 South 10th Street
Lincoln NE 68508

CANCELLATION

SHOULD ANY OF THE ABOVE DESCRIBED POLICIES BE CANCELLED BEFORE THE EXPIRATION DATE THEREOF, NOTICE WILL BE DELIVERED IN ACCORDANCE WITH THE POLICY PROVISIONS.

AUTHORIZED REPRESENTATIVE

© 1988-2015 ACORD CORPORATION. All rights reserved.

The ACORD name and logo are registered marks of ACORD

THIS ENDORSEMENT CHANGES THE POLICY. PLEASE READ IT CAREFULLY.

CONTRACTORS XTEND ENDORSEMENT

This endorsement modifies insurance provided under the following:

COMMERCIAL GENERAL LIABILITY COVERAGE PART

GENERAL DESCRIPTION OF COVERAGE – This endorsement broadens coverage. However, coverage for any injury, damage or medical expenses described in any of the provisions of this endorsement may be excluded or limited by another endorsement to this Coverage Part, and these coverage broadening provisions do not apply to the extent that coverage is excluded or limited by such an endorsement. The following listing is a general coverage description only. Limitations and exclusions may apply to these coverages. Read all the provisions of this endorsement and the rest of your policy carefully to determine rights, duties, and what is and is not covered.

A. Aircraft Chartered With Pilot

B. Damage To Premises Rented To You

C. Increased Supplementary Payments

D. Incidental Medical Malpractice

E. Who Is An Insured – Newly Acquired Or Formed Organizations

F. Who Is An Insured – Broadened Named Insured – Unnamed Subsidiaries

G. Blanket Additional Insured – Owners, Managers Or Lessors Of Premises

H. Blanket Additional Insured – Lessors Of Leased Equipment

I. Blanket Additional Insured – States Or Political Subdivisions – Permits

J. Knowledge And Notice Of Occurrence Or Offense

K. Unintentional Omission

L. Blanket Waiver Of Subrogation

M. Amended Bodily Injury Definition

N. Contractual Liability – Railroads

PROVISIONS

A. AIRCRAFT CHARTERED WITH PILOT

The following is added to Exclusion **g.**, **Aircraft, Auto Or Watercraft,** in Paragraph **2.** of **SECTION I – COVERAGES – COVERAGE A BODILY INJURY AND PROPERTY DAMAGE LIABILITY**:

This exclusion does not apply to an aircraft that is:

(a) Chartered with a pilot to any insured;

(b) Not owned by any insured; and

(c) Not being used to carry any person or property for a charge.

B. DAMAGE TO PREMISES RENTED TO YOU

1. The first paragraph of the exceptions in Exclusion **j.**, **Damage To Property**, in Paragraph **2.** of **SECTION I – COVERAGES – COVERAGE A BODILY INJURY AND PROPERTY DAMAGE LIABILITY** is deleted.

2. The following replaces the last paragraph of Paragraph **2.**, **Exclusions**, of **SECTION I – COVERAGES – COVERAGE A. BODILY INJURY AND PROPERTY DAMAGE LIABILITY**:

Exclusions **c.** and **g.** through **n.** do not apply to "premises damage". Exclusion **f.(1)(a)** does not apply to "premises damage" caused by:

a. Fire;

b. Explosion;

c. Lightning;

d. Smoke resulting from such fire, explosion, or lightning; or

e. Water;

unless Exclusion **f.** of Section I – Coverage A – Bodily Injury And Property Damage Liability is replaced by another endorsement to this Coverage Part that has Exclusion – All Pollution Injury Or Damage or Total Pollution Exclusion in its title.

A separate limit of insurance applies to "premises damage" as described in Paragraph **6.** of **SECTION III – LIMITS OF INSURANCE**.

© 2011 The Travelers Indemnity Company. All rights reserved.

3. The following replaces Paragraph **6.** of **SECTION III – LIMITS OF INSURANCE**:

   Subject to **5.** above, the Damage To Premises Rented To You Limit is the most we will pay under Coverage **A** for damages because of "premises damage" to any one premises. The Damage To Premises Rented To You Limit will apply to all "property damage" proximately caused by the same "occurrence", whether such damage results from: fire; explosion; lightning; smoke resulting from such fire, explosion, or lightning; or water; or any combination of any of these causes.

   The Damage To Premises Rented To You Limit will be:

   a. The amount shown for the Damage To Premises Rented To You Limit on the Declarations of this Coverage Part; or

   b. $300,000 if no amount is shown for the Damage To Premises Rented To You Limit on the Declarations of this Coverage Part.

4. The following replaces Paragraph **a.** of the definition of "insured contract" in the **DEFINITIONS** Section:

   a. A contract for a lease of premises. However, that portion of the contract for a lease of premises that indemnifies any person or organization for "premises damage" is not an "insured contract";

5. The following is added to the **DEFINITIONS** Section:

   "Premises damage" means "property damage" to:

   a. Any premises while rented to you or temporarily occupied by you with permission of the owner; or

   b. The contents of any premises while such premises is rented to you, if you rent such premises for a period of seven or fewer consecutive days.

6. The following replaces Paragraph **4.b.(1)(b)** of **SECTION IV – COMMERCIAL GENERAL LIABILITY CONDITIONS**:

   (b) That is insurance for "premises damage"; or

7. Paragraph **4.b.(1)(c)** of **SECTION IV – COMMERCIAL GENERAL LIABILITY CONDITIONS** is deleted.

C. INCREASED SUPPLEMENTARY PAYMENTS

1. The following replaces Paragraph **1.b.** of **SUPPLEMENTARY PAYMENTS – COVERAGES A AND B** of **SECTION I – COVERAGE**:

   b. Up to $2,500 for the cost of bail bonds required because of accidents or traffic law violations arising out of the use of any vehicle to which the Bodily Injury Liability Coverage applies. We do not have to furnish these bonds.

2. The following replaces Paragraph **1.d.** of **SUPPLEMENTARY PAYMENTS – COVERAGES A AND B** of **SECTION I – COVERAGES**:

   d. All reasonable expenses incurred by the insured at our request to assist us in the investigation or defense of the claim or "suit", including actual loss of earnings up to $500 a day because of time off from work.

D. INCIDENTAL MEDICAL MALPRACTICE

1. The following is added to the definition of "occurrence" in the **DEFINITIONS** Section:

   "Occurrence" also means an act or omission committed in providing or failing to provide "incidental medical services", first aid or "Good Samaritan services" to a person.

2. The following is added to Paragraph **2.a.(1)** of **SECTION II – WHO IS AN INSURED**:

   Paragraph **(1)(d)** above does not apply to "bodily injury" arising out of providing or failing to provide:

   (i) "Incidental medical services" by any of your "employees" who is a nurse practitioner, registered nurse, licensed practical nurse, nurse assistant, emergency medical technician or paramedic; or

   (ii) First aid or "Good Samaritan services" by any of your "employees" or "volunteer workers", other than an employed or volunteer doctor. Any such "employees" or "volunteer workers" providing or failing to provide first aid or "Good Samaritan services" during their work hours for you will be deemed to be acting within the scope of their employment by you or performing duties related to the conduct of your business.

© 2011 The Travelers Indemnity Company. All rights reserved.

3. The following is added to Paragraph **5.** of **SECTION III – LIMITS OF INSURANCE**:

   For the purposes of determining the applicable Each Occurrence Limit, all related acts or omissions committed in providing or failing to provide "incidental medical services", first aid or "Good Samaritan services" to any one person will be deemed to be one "occurrence".

4. The following exclusion is added to Paragraph **2.**, **Exclusions**, of **SECTION I – COVERAGES – COVERAGE A BODILY INJURY AND PROPERTY DAMAGE LIABILITY**:

   Sale Of Pharmaceuticals

   "Bodily injury" or "property damage" arising out of the willful violation of a penal statute or ordinance relating to the sale of pharmaceuticals committed by, or with the knowledge or consent of, the insured.

5. The following is added to the **DEFINITIONS** Section:

   "Incidental medical services" means:

   a. Medical, surgical, dental, laboratory, x-ray or nursing service or treatment, advice or instruction, or the related furnishing of food or beverages; or

   b. The furnishing or dispensing of drugs or medical, dental, or surgical supplies or appliances.

   "Good Samaritan services" means any emergency medical services for which no compensation is demanded or received.

6. The following is added to Paragraph **4.b.**, **Excess Insurance**, of **SECTION IV – COMMERCIAL GENERAL LIABILITY CONDITIONS**:

   The insurance is excess over any valid and collectible other insurance available to the insured, whether primary, excess, contingent or on any other basis, that is available to any of your "employees" or "volunteer workers" for "bodily injury" that arises out of providing or failing to provide "incidental medical services", first aid or "Good Samaritan services" to any person to the extent not subject to Paragraph **2.a.(1)** of Section **II** – Who Is An Insured.

E. WHO IS AN INSURED – NEWLY ACQUIRED OR FORMED ORGANIZATIONS

The following replaces Paragraph **4.** of **SECTION II – WHO IS AN INSURED**:

4. Any organization you newly acquire or form, other than a partnership, joint venture or limited liability company, of which you are the sole owner or in which you maintain the majority ownership interest, will qualify as a Named Insured if there is no other insurance which provides similar coverage to that organization. However:

   a. Coverage under this provision is afforded only:

      (1) Until the 180th day after you acquire or form the organization or the end of the policy period, whichever is earlier, if you do not report such organization in writing to us within 180 days after you acquire or form it; or

      (2) Until the end of the policy period, when that date is later than 180 days after you acquire or form such organization, if you report such organization in writing to us within 180 days after you acquire or form it, and we agree in writing that it will continue to be a Named Insured until the end of the policy period;

   b. Coverage **A** does not apply to "bodily injury" or "property damage" that occurred before you acquired or formed the organization; and

   c. Coverage **B** does not apply to "personal injury" or "advertising injury" arising out of an offense committed before you acquired or formed the organization.

F. WHO IS AN INSURED – BROADENED NAMED INSURED – UNNAMED SUBSIDIARIES

The following is added to **SECTION II – WHO IS AN INSURED**:

Any of your subsidiaries, other than a partnership, joint venture or limited liability company, that is not shown as a Named Insured in the Declarations is a Named Insured if you maintain an ownership interest of more than 50% in such subsidiary on the first day of the policy period.

No such subsidiary is an insured for "bodily injury" or "property damage" that occurred, or "personal injury" or "advertising injury" caused by an offense committed after the date, if any, during the policy period, that you no longer maintain an ownership interest of more than 50% in such subsidiary.

© 2011 The Travelers Indemnity Company. All rights reserved.

G. BLANKET ADDITIONAL INSURED – OWNERS, MANAGERS OR LESSORS OF PREMISES

The following is added to **SECTION II – WHO IS AN INSURED**:

Any person or organization that is a premises owner, manager or lessor and that you have agreed in a written contract or agreement to include as an additional insured on this Coverage Part is an insured, but only with respect to liability for "bodily injury", "property damage", "personal injury" or "advertising injury" that:

a. Is "bodily injury" or "property damage" that occurs, or is "personal injury" or "advertising injury" caused by an offense that is committed, subsequent to the execution of that contract or agreement; and

b. Arises out of the ownership, maintenance or use of that part of any premises leased to you.

The insurance provided to such premises owner, manager or lessor is subject to the following provisions:

a. The limits of insurance provided to such premises owner, manager or lessor will be the minimum limits which you agreed to provide in the written contract or agreement, or the limits shown on the Declarations, whichever are less.

b. The insurance provided to such premises owner, manager or lessor does not apply to:

(1) Any "bodily injury" or "property damage" that occurs, or "personal injury" or "advertising injury" caused by an offense that is committed, after you cease to be a tenant in that premises; or

(2) Structural alterations, new construction or demolition operations performed by or on behalf of such premises owner, lessor or manager.

c. The insurance provided to such premises owner, manager or lessor is excess over any valid and collectible other insurance available to such premises owner, manager or lessor, whether primary, excess, contingent or on any other basis, unless you have agreed in the written contract or agreement that this insurance must be primary to, or non-contributory with, such other insurance, in which case this insurance will be primary to, and non-contributory with, such other insurance.

H. BLANKET ADDITIONAL INSURED – LESSORS OF LEASED EQUIPMENT

The following is added to **SECTION II – WHO IS AN INSURED**:

Any person or organization that is an equipment lessor and that you have agreed in a written contract or agreement to include as an insured on this Coverage Part is an insured, but only with respect to liability for "bodily injury", "property damage", "personal injury" or "advertising injury" that:

a. Is "bodily injury" or "property damage" that occurs, or is "personal injury" or "advertising injury" caused by an offense that is committed, subsequent to the execution of that contract or agreement; and

b. Is caused, in whole or in part, by your acts or omissions in the maintenance, operation or use of equipment leased to you by such equipment lessor.

The insurance provided to such equipment lessor is subject to the following provisions:

a. The limits of insurance provided to such equipment lessor will be the minimum limits which you agreed to provide in the written contract or agreement, or the limits shown on the Declarations, whichever are less.

b. The insurance provided to such equipment lessor does not apply to any "bodily injury" or "property damage" that occurs, or "personal injury" or "advertising injury" caused by an offense that is committed, after the equipment lease expires.

c. The insurance provided to such equipment lessor is excess over any valid and collectible other insurance available to such equipment lessor, whether primary, excess, contingent or on any other basis, unless you have agreed in the written contract or agreement that this insurance must be primary to, or non-contributory with, such other insurance, in which case this insurance will be primary to, and non-contributory with, such other insurance.

I. BLANKET ADDITIONAL INSURED – STATES OR POLITICAL SUBDIVISIONS – PERMITS

The following is added to **SECTION II – WHO IS AN INSURED**:

Any state or political subdivision that has issued a permit in connection with operations performed by you or on your behalf and that you are required

© 2011 The Travelers Indemnity Company. All rights reserved.

by any ordinance, law or building code to include as an additional insured on this Coverage Part is an insured, but only with respect to liability for "bodily injury", "property damage", "personal injury" or "advertising injury" arising out of such operations.

The insurance provided to such state or political subdivision does not apply to:

a. Any "bodily injury," "property damage," "personal injury" or "advertising injury" arising out of operations performed for that state or political subdivision; or

b. Any "bodily injury" or "property damage" included in the "products-completed operations hazard".

J. KNOWLEDGE AND NOTICE OF OCCURRENCE OR OFFENSE

The following is added to Paragraph **2.**, **Duties In The Event of Occurrence, Offense, Claim or Suit**, of **SECTION IV – COMMERCIAL GENERAL LIABILITY CONDITIONS**:

e. The following provisions apply to Paragraph **a.** above, but only for the purposes of the insurance provided under this Coverage Part to you or any insured listed in Paragraph **1.** or **2.** of Section II – Who Is An Insured:

(1) Notice to us of such "occurrence" or offense must be given as soon as practicable only after the "occurrence" or offense is known by you (if you are an individual), any of your partners or members who is an individual (if you are a partnership or joint venture), any of your managers who is an individual (if you are a limited liability company), any of your "executive officers" or directors (if you are an organization other than a partnership, joint venture or limited liability company) or any "employee" authorized by you to give notice of an "occurrence" or offense.

(2) If you are a partnership, joint venture or limited liability company, and none of your partners, joint venture members or managers are individuals, notice to us of such "occurrence" or offense must be given as soon as practicable only after the "occurrence" or offense is known by:

(a) Any individual who is:

(i) A partner or member of any partnership or joint venture;

(ii) A manager of any limited liability company; or

(iii) An executive officer or director of any other organization;

that is your partner, joint venture member or manager; or

(b) Any "employee" authorized by such partnership, joint venture, limited liability company or other organization to give notice of an "occurrence" or offense.

(3) Notice to us of such "occurrence" or of an offense will be deemed to be given as soon as practicable if it is given in good faith as soon as practicable to your workers' compensation insurer. This applies only if you subsequently give notice to us of the "occurrence" or offense as soon as practicable after any of the persons described in Paragraphs **e. (1)** or **(2)** above discovers that the "occurrence" or offense may result in sums to which the insurance provided under this Coverage Part may apply.

However, if this Coverage Part includes an endorsement that provides limited coverage for "bodily injury" or "property damage" or pollution costs arising out of a discharge, release or escape of "pollutants" which contains a requirement that the discharge, release or escape of "pollutants" must be reported to us within a specific number of days after its abrupt commencement, this Paragraph **e.** does not affect that requirement.

K. UNINTENTIONAL OMISSION

The following is added to Paragraph **6.**, **Representations**, of **SECTION IV – COMMERCIAL GENERAL LIABILITY CONDITIONS**:

The unintentional omission of, or unintentional error in, any information provided by you which we relied upon in issuing this policy will not prejudice your rights under this insurance. However, this provision does not affect our right to collect additional premium or to exercise our rights of cancellation or nonrenewal in accordance with applicable insurance laws or regulations.

L. BLANKET WAIVER OF SUBROGATION

The following is added to Paragraph **8.**, **Transfer Of Rights Of Recovery Against Others To Us**, of **SECTION IV – COMMERCIAL GENERAL LIABILITY CONDITIONS**:

© 2011 The Travelers Indemnity Company. All rights reserved.

If the insured has agreed in a contract or agreement to waive that insured's right of recovery against any person or organization, we waive our right of recovery against such person or organization, but only for payments we make because of:

a. "Bodily injury" or "property damage" that occurs; or

b. "Personal injury" or "advertising injury" caused by an offense that is committed;

subsequent to the execution of that contract or agreement.

M. **AMENDED BODILY INJURY DEFINITION**

The following replaces the definition of "bodily injury" in the **DEFINITIONS** Section:

3. "Bodily injury" means bodily injury, mental anguish, mental injury, shock, fright, disability, humiliation, sickness or disease sustained by a person, including death resulting from any of these at any time.

N. **CONTRACTUAL LIABILITY – RAILROADS**

1. The following replaces Paragraph **c.** of the definition of "insured contract" in the **DEFINITIONS** Section:

   c. Any easement or license agreement;

2. Paragraph **f.(1)** of the definition of "insured contract" in the **DEFINITIONS** Section is deleted.

© 2011 The Travelers Indemnity Company. All rights reserved.

THIS ENDORSEMENT CHANGES THE POLICY. PLEASE READ IT CAREFULLY.

BLANKET ADDITIONAL INSURED – PRIMARY AND NON-CONTRIBUTORY WITH OTHER INSURANCE

This endorsement modifies insurance provided under the following:

BUSINESS AUTO COVERAGE FORM

PROVISIONS

1. The following is added to Paragraph **A.1.c., Who Is An Insured**, of **SECTION II – COVERED AUTOS LIABILITY COVERAGE**:

   Any person or organization who is required under a written contract or agreement between you and that person or organization, that is signed and executed by you before the "bodily injury" or "property damage" occurs and that is in effect during the policy period, to be named as an additional insured is an "insured" for Covered Autos Liability Coverage, but only for damages to which this insurance applies and only to the extent that person or organization qualifies as an "insured" under the Who Is An Insured provision contained in **SECTION II**.

2. The following is added to Paragraph **B.5., Other Insurance** of **SECTION IV – BUSINESS AUTO CONDITIONS**:

   Regardless of the provisions of paragraph **a.** and paragraph **d.** of this part **5. Other Insurance,** this insurance is primary to and non-contributory with applicable other insurance under which an additional insured person or organization is the first named insured when the written contract or agreement between you and that person or organization, that is signed and executed by you before the "bodily injury" or "property damage" occurs and that is in effect during the policy period, requires this insurance to be primary and non-contributory.

© 2015 The Travelers Indemnity Company. All rights reserved.
Includes copyrighted material of Insurance Services Office, Inc. with its permission.

TRAVELERS

ONE TOWER SQUARE
HARTFORD, CT 06183

WORKERS COMPENSATION
AND
EMPLOYERS LIABILITY POLICY

ENDORSEMENT WC 00 03 13 (00) - 01

POLICY NUMBER: UB8K467132

WAIVER OF OUR RIGHT TO RECOVER FROM OTHERS ENDORSEMENT

We have the right to recover our payments from anyone liable for an injury covered by this policy. We will not enforce our right against the person or organization named in the Schedule. (This agreement applies only to the extent that you perform work under a written contract that requires you to obtain this agreement from us.)

This agreement shall not operate directly or indirectly to benefit any one not named in the Schedule.

SCHEDULE

DESIGNATED PERSON:

DESIGNATED ORGANIZATION:

ANY PERSON OR ORGANIZATION FOR WHICH THE INSURED HAS AGREED BY WRITTEN CONTRACT EXECUTED PRIOR TO LOSS TO FURNISH THIS WAIVER.

ST ASSIGN:

AMENDMENT TO CONTRACT
Annual Supply
Workstations and Accessories
Bid No. 17-140
City of Lincoln, Lancaster County and
City of Lincoln-Lancaster County Public Building Commission
Renewal with Price Increase & Revision of New Workstations
Office Interiors & Design, Inc.

This Amendment is hereby entered into by and between Office Interiors & Design, Inc., 1401 Dahlberg Drive, Ste. A, Lincoln, NE 68512 hereinafter "Contractor") and the City of Lincoln, Lancaster County and the City of Lincoln-Lancaster County Public Building Commission (hereinafter "Owners"), for the purpose of amending the Contract dated August 10, 2017 executed under City Directorial Order No. 17628, and County Contract C-17-0646, dated August 15, 2017, and executed by the City of Lincoln-Lancaster County Public Building Commission, on September 12, 2017, for Annual Supply - Workstations and Accessories, Bid No. 17-140, which is made a part of this amendment by this reference.

WHEREAS, the original term of the Contract is September 12, 2017 through September 11, 2018, with the option to renew for three (3) additional one (1) year terms upon written mutual consent by all parties; and

WHEREAS, the Contract was amended by City Executive Order No. 92265, executed by the City on September 10, 2018, and by County Contract C-18-0539 executed by the County Board on September 11, 2018, and executed by the City of Lincoln-Lancaster County Public Building Commission on September 18, 2018, to renew the contract for an additional one (1) year term from September 12, 2018 through September 11, 2019; and

WHEREAS, the Contract was amended by City Executive Order No. 93591, executed by the City on September 16, 2019, and by County Contract C-19-0690 executed by the County Board on September 10, 2019, and executed by the City of Lincoln-Lancaster County Public Building Commission on September 17, 2019, to renew the contract for an additional one (1) year term from September 12, 2019 through September 11, 2020; and

WHEREAS, the parties hereby renew the Contract for an additional one (1) year term beginning September 12, 2020 through September 11, 2021; and

WHEREAS, the parties hereby amend the Contract to reflect revision of new workstations and price increase as listed per Attachment A; and

WHEREAS, the expenditures for the City of Lincoln for the term of this renewal shall not exceed $60,000.00 without approval by the City of Lincoln; and

WHEREAS, the expenditures for Lancaster County for the term of this renewal shall not exceed $25,000.00 without approval by the Lancaster County Board; and

WHEREAS, the expenditures for the City of Lincoln-Lancaster County Public Building Commission for the term of this renewal shall not exceed $500.00 without approval by the Public Building Commission; and

NOW, THEREFORE, IN CONSIDERATION of the mutual covenants contained in the Contract under City Directorial Order No. 17628 and County Contract C-17-0646, all amendments thereto, and as stated herein, the parties agree as follows:

1) The parties hereby renew the Contract for an additional one (1) year term beginning September 12, 2020 through September 11, 2021.

2) The parties hereby amend the Contract to reflect revision of new workstations and price increase as listed per Attachment A.
3) The expenditures for the City of Lincoln for the term of this renewal shall not exceed $60,000.00 without approval by the City of Lincoln.
4) The expenditures for Lancaster County for the term of this renewal shall not exceed $25,000.00 without approval by the Lancaster County Board.
5) The expenditures for the City of Lincoln-Lancaster County Public Building Commission for the term of this renewal shall not exceed $500.00 without approval by the Public Building Commission.
6) All other terms of the Contract, not in conflict with this Amendment, shall remain in force and effect.

The Parties do hereby agree to all the terms and conditions of this Amendment. This Amendment shall be binding upon the parties, their heirs, administrators, executors, legal and personal representatives, successors, and assigns.

IN WITNESS WHEREOF, the Parties do hereby execute this Amendment upon completion of signatures on:

Vendor Signature Page
City of Lincoln Signature Page
Lancaster County Signature Page
City of Lincoln-Lancaster County Public Building Commission Signature Page

Vendor Signature Page

AMENDMENT TO CONTRACT
Annual Supply
Workstations and Accessories
Bid No. 17-140
City of Lincoln, Lancaster County and
City of Lincoln-Lancaster County Public Building Commission
Renewal with Price Increase & Revision of New Workstations
Office Interiors & Design, Inc.

Please sign, date and return within 5 days of receipt.

Mail to: City/County Purchasing
Attn: Sandy Rocke
440 So. 8th St., Ste. 200
Lincoln, NE 68508
Or email to: srocke@lincoln.ne.gov

Company Name:	Office Interiors & Design
By: (Please Sign)	Nancy Kraft
By: (Please Print)	Nancy Kraft
Title:	Director of Workplace Solutions
Company Address:	1401 Dahlberg Drive
Company Phone & Fax:	4024047500
E-Mail Address:	nancy.kraft@oidinc.com
Date:	8/19/2020
Contact Person for Orders or Service	Nancy Kraft
Contact Phone Number:	4027307262

City of Lincoln Signature Page

AMENDMENT TO CONTRACT
Annual Supply
Workstations and Accessories
Bid No. 17-140
City of Lincoln, Lancaster County and
City of Lincoln-Lancaster County Public Building Commission
Renewal with Price Increase & Revision of New Workstations
Office Interiors & Design, Inc.

EXECUTION BY THE CITY OF LINCOLN, NEBRASKA

ATTEST:

_____
City Clerk

CITY OF LINCOLN, NEBRASKA

_____
Leirion Gaylor Baird, Mayor

Approved by Executive Order No._____

dated _____

Lancaster County Signature Page

AMENDMENT TO CONTRACT
Annual Supply
Workstations and Accessories
Bid No. 17-140
City of Lincoln, Lancaster County and
City of Lincoln-Lancaster County Public Building Commission
Renewal with Price Increase & Revision of New Workstations
Office Interiors & Design, Inc.

EXECUTION BY LANCASTER COUNTY, NEBRASKA

Contract Approved as to Form:

_____
Deputy Lancaster County Attorney

The Board of County Commissioners of
Lancaster, Nebraska

_____

_____

_____

_____

_____

dated _____

City of Lincoln-Lancaster County Public Building Commission
Signature Page

AMENDMENT TO CONTRACT
Annual Supply
Workstations and Accessories
Bid No. 17-140
City of Lincoln, Lancaster County and
City of Lincoln-Lancaster County Public Building Commission
Renewal with Price Increase & Revision of New Workstations
Office Interiors & Design, Inc.

EXECUTION BY LINCOLN-LANCASTER COUNTY PUBLIC BUILDING COMMISSION

ATTEST:

_____ _____
Public Building Commission Attorney Chairperson, Public Building Commission

dated _____

Prepared for:

CITY OF LINCOLN™ NEBRASKA

BID NUMBER: 17-140

Ergonomics Workstations & Accessories Bid

REVISED: August 2020

OFFICE INTERIORS & DESIGN

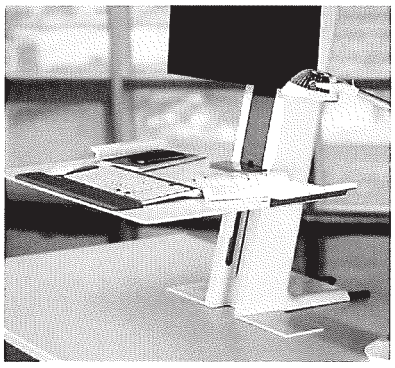

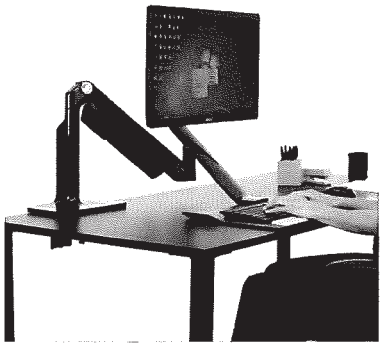

ELECTRIC / HEIGHT ADJUSTABLE / COMPLETE DESK

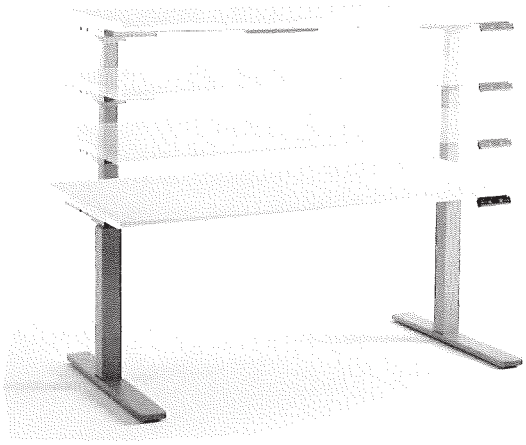

TEKNION / HiSPACE ELECTRIC DESK

Complete Height Adjustable Desk w/ Top

http://www.teknion.com/ca/products/galleries/hispace-gallery

- Foundation HPL Laminate Top
- Platinum (Silver) Metal Base
- Memory Display Switch
- 200lb Rise Capacity
- Range: 25.5" – 50.5"H

24"D x 48"W	$674.00
30"D x 60"W	$725.00
30"D x 72"W	$753.00

(*Available 24-30"D x 48-72"W)

Installation Estimate $150

ELECTRIC / HEIGHT ADJUSTABLE / BASE ONLY

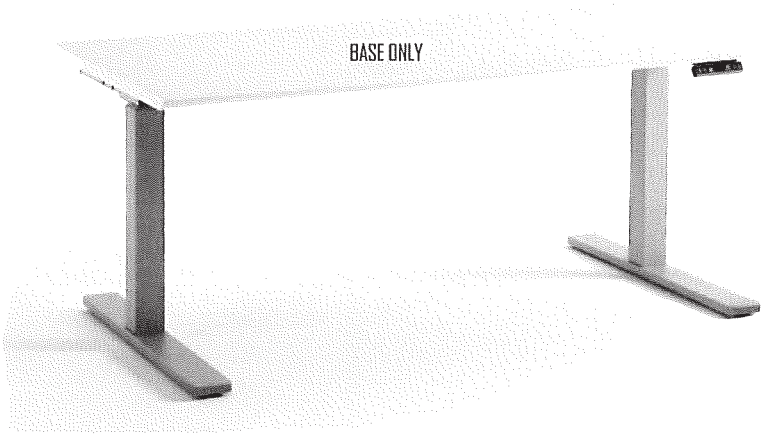

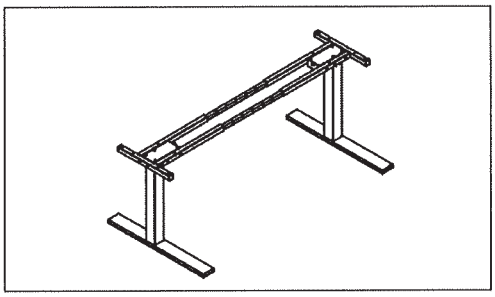

ESI ELECTRIC BASE ONLY

ESI Victory-LX - 2 Leg Base Only

Base Only (For retrofitting existing rectangle, or corner tops)
https://www.esiergo.com/height-adjustable-tables/electric-table-bases/sp/victory-lx-2-leg/

- Platinum (Silver) Metal Base
- (*Available 24-30"D x 48-72"W)
- Memory Display Switch
- 200lb Rise Capacity
- Range: 25.5" – 50.5"H

24"-30"D x 48"-72W $563.00

(*Telescoping base fits under a variety of sized tops)

Installation Estimate $125

ELECTRIC / HEIGHT ADJUSTABLE / BASE ONLY (Extended Corner)

DIGITAL KEYPAD INCLUDED WITH BASE

- Digital programmable switch with 3 memory settings
- Keypad can slide under worksurface to store out of the way

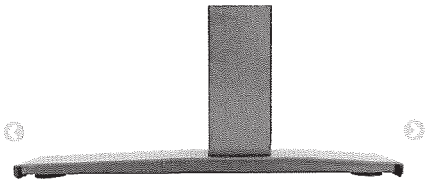

ESI Victory-LX - 2 Leg Base Only
2VT-LX-C48-24/30

Base Only (For retrofitting existing extended corner desks)

https://www.esiergo.com/height-adjustable-tables/electric-table-bases/sp/victory-lx-2-leg/

Silver Standard; White or Black optional
Basic Up/Down Switch
Range: 22" – 47"H
220lb Rise Capacity
Exceeds BIFMA x5.5 requirements

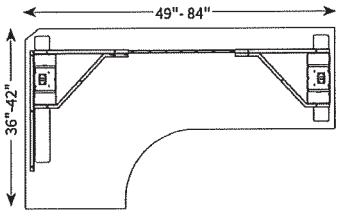

MED

36-42"D x 48"-84W $573.00

(*Telescoping base fits under a variety of sized tops)

Installation Estimate $125

ELECTRIC / HEIGHT ADJUSTABLE / BASE ONLY (3-Leg)

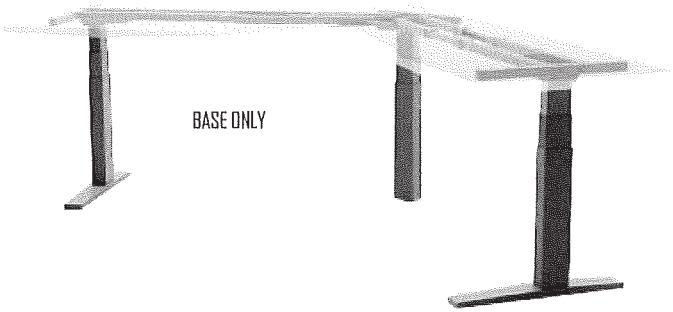

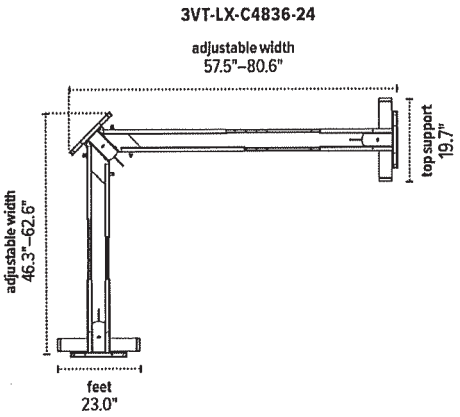

48-84"D x 48"-84W $726.00

(*Telescoping base fits under a variety of sized tops)

Installation Estimate $150

ESI Victory-LX - 3 Leg Base Only
3VT-LX-C4836-24

Base Only (For retrofitting existing extended corner desks)

https://www.esiergo.com/height-adjustable-tables/electric-table-bases/sp/victory-lx-3-leg/

Silver Standard; White or Black optional
Basic Up/Down Switch
Range: 22" – 47"H
320lb Rise Capacity
Exceeds BIFMA x5.5 requirements

HEIGHT ADJUSTABLE / DESK MOUNTED

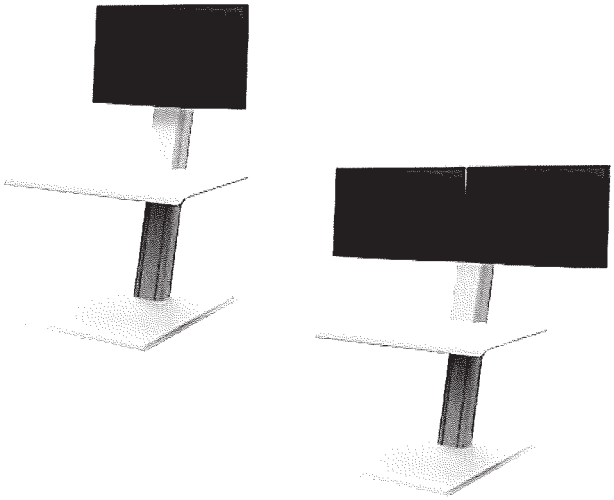

Humanscale's QuickStand Eco is the next generation in portable sit/stand solutions.

Sleeker, easier to use and comprised of more sustainable materials than ever before, it is a vast improvement over the current generation of sit/stand surfaces. QuickStand Eco features simple setup, portability and near effortless adjustability — transforming ordinary desktops into healthy, active workspaces.

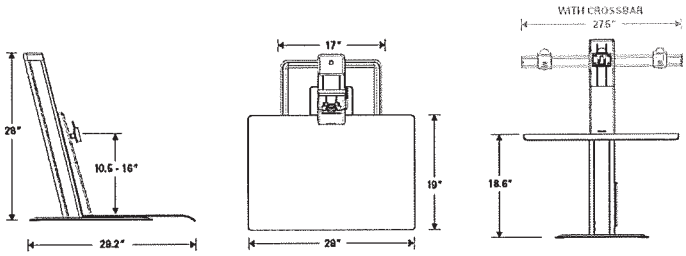

HUMANSCALE / QUICKSTAND ECO – Single or Double

https://www.humanscale.com/products/product.cfm?group=quickstandeco

White or Black

Dimensions: 28.1" H (in resting position) x 28" W x 29.2" D
Work Surface: 28" W (710mm) x 19" D (480mm)
Minimum Desk Required - 29"Product Weight:
Laptop - 38.5 lbs. (17.5 kg)
Single Monitor - 42.3 lbs. (19.2 kg)
Dual Monitor - 45 lbs. (20.5 kg)
Product Weight with Box:
Laptop - 51.2 lbs. (23.2 kg)
Single Monitor - 55.0 lbs. (24.9 kg)
Dual Monitor - 57.7 lbs. (26.2 kg)
Vertical Monitor Adjustment - 5"
Total Height Range - 18.6"

Single Monitor	$413.45
Double Monitor	$474.92
Installation for 1 2 or more call for quote	$85

MONITOR ARMS

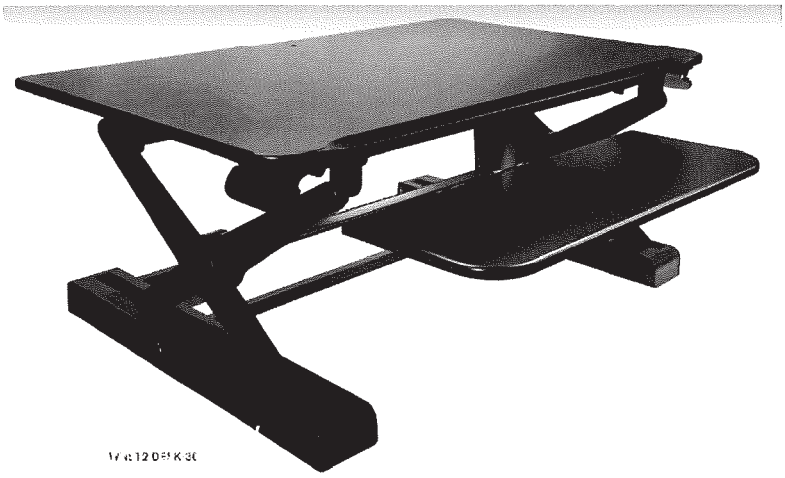

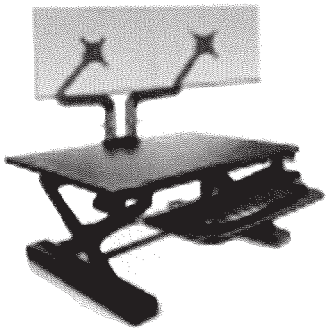

INNOVATIVE / Winston Desk 2

Available in two sizes: 36" and 36" corner

Spring assisted to raise and lower in seconds
Upper desk surface has a 10mm bolt-thru hole for mounting an optional monitor arm.
Ships fully assembled, no installation required.
5 Year Warranty
Black or White

36"W	$365.
36" W corner	$376.
Freight	$28.00 EACH
Installation for 1 2 or more call for quote	$67

KEYBOARD TRAYS

6690090HG22	$206.00	
Installation		$56

(Balance-M/TRACKLESS)-(LO	$260
Installation	$56

3151.KBM04/KBP03	$270.
Installation	$56

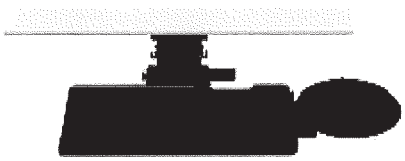

HUMANSCALE / KEYBOARD TRAY

6690090HF22

https://www.humanscale.com/products/category_detail.cfm?category=keyboard_systems

Black
Standard Mechanism / Platform
9" Clip Mouse High
19" Foam Palm Support w/ Synthetic Leather Cover
22" Track Length

SYMMETRY / TRACKLESS KEYBOARD TRAY
(for Height Adjustable Worksurfaces)

Balance-M/TRACKLESS)-(LO

http://www.symmetryoffice.com/tableBuilder/index.cfm?pid=245

Black
Standard Mechanism for Height Adjustable Surfaces
Includes Mouse Pad and Mouse Guard

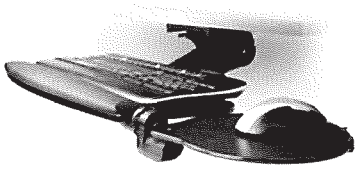

SYMMETRY / TRACKLESS KEYBOARD
(for Height Adjustable Worksurfaces)

3151.KBM04/3151.KBP03

http://www.symmetryoffice.com/tableBuilder/index.cfm?pid=245

Black
Standard Mechanism for Height Adjustable Surfaces
Includes Mouse Pad and Mouse Guard

*Installation labor to be quoted as required; including vendor to perform a site visit to measure and determine proper needs of the workspace.

MONITOR ARMS

DOUBLE MONITOR ARM

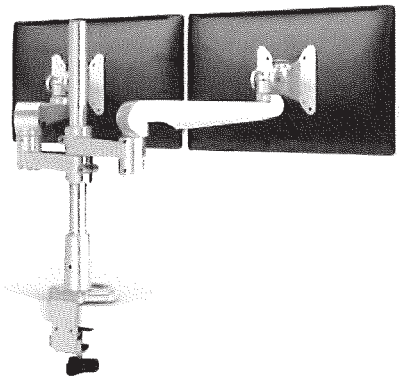

SINGLE MONITOR ARM

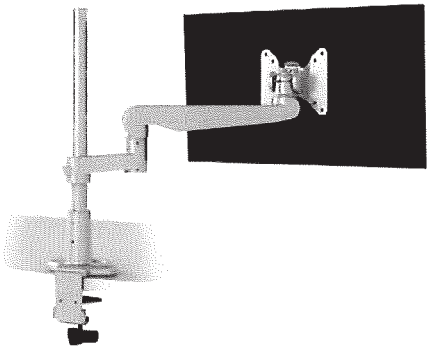

ESI / EVOLVE-F

EVOLVE1-F // EVOLVE2-F

https://www.esiergo.com/monitor-arms/single/sp/evolve1-f/

https://www.esiergo.com/monitor-arms/dual/sp/evolve2-f/

Single and Dual Monitor Arm.
Manual Height Adjustment.

Monitor Extension: 16.25"
Monitor Retraction: 3"
Monitor Tilt: +90º/-25º
Monitor Rotation: +90º/-90º
Weight Capacity (per arm):
Maximum: 20 lbs
180º Lock-Out Feature
Quick Release
16" Pole
Desk clamp & grommet mount included
Max Monitor Width: 27" (bezel measured left to right)

Single Monitor Arm	$163.
Double Monitor Arm	$259.50
Freight	$25.00 ea
Installation	$56

VALUES

EXCELLENT

Office Interiors & Design is committed to excellence in all aspects of interior design and furniture products and services; in communication, space planning and design, CAD drawing, furniture specification, finish selection, order placement, receiving, warehousing, installation and client wrap-up; in the hiring of the absolute best people and continuing professional development of everyone; in all administrative policies and procedures; and participation in the communities that fuel the continual reinvigoration of the interior design community.

LISTENING

Remaining ever mindful that each client is a unique individual or group, with unique and specific requirements, the employees of OID are committed to sharing the client vision; through active listening, providing thoughtful, individualized solutions, and remaining flexible of mind, the shared vision is attained.

STEWARDSHIP

As a mid-western, family owned company we recognize that our company's strength comes from our people; and that our people come from our community. OID is committed to fostering a love of design in young people and we pledge to continue to support local design students and curricula.

KNOWLEDGE

OID has extensive experience and product expertise across many markets; including corporate, government, public spaces, technology and higher education. From top to bottom, we understand the specific markets we serve.

We utilize the latest technology to accommodate client needs quickly. Planning, specifications, ordering and tracking orders are managed in a way that ensures speed and accuracy.

PEOPLE

We pride ourselves on the knowledge, expertise and professionalism of our entire company. Many of our employees have been with the company for over 15 years, and we are continually honored with an incredible employee retention rate as well as a commitment to ongoing training.

Our service team is comprised of extremely dependable and professional individuals that continue to reinforce the positive experience of working with our company.

MISSION

Office Interiors & Design, Inc. is a full-service commercial furniture dealership dedicated to delivering an enjoyable, professional client experience; ever-striving to realize the client vision while strictly adhering to budget and schedule.

OID was founded by Dian Pickerel in 1995 and remains a family-owned, women-owned business.

OID is a client-first company that positions itself for long-term success by committing to client delight.

OID is pledged to excellence of client experience and creating the amazing spaces of our client's vision and that the design, administrative and installation teams are trained experts; ready to assist clients in all phases of the process, communicate effectively, and create solutions.

Office Interiors & Design intends that its clients achieve all of their project goals and are delighted by the process and results.

VISION

Office Interiors & Design, Inc. is a preeminent regional commercial furniture dealership, where the furniture experience transforms every client into an earnest, vocal advocate of our firm.

SERVICES

DID is a single source resource for all commercial furniture needs across of variety of markets. We support clients from space planning through furniture assembly and move in, as well as post occupancy needs. It's our job to take the hassle out of creating smart furniture solutions.

DESIGN

We offer full design services including workplace strategy, typical development, 3D renderings, space planning, technical specification, fabric and finish selections, installation drawings and field verification.

CUSTOMIZATION

We help our clients achieve a vision that also fits with their organizations branding and goals. Our manufacturer partners allows us to customize everything from colors, finishes, fabrics, furniture design, and more. Each product is truly designed to order the way you want it.

PRODUCT SOLUTIONS

As workplace design and project management specialists, we help create and refine your vision for the office. We provide idea starters, full floor plan product selections, and offerings that fit within your budget.

PROJECT MANAGEMENT

Our experienced Project Leads provide you one point of contact to tailor your project to specific budget and schedule needs. Dedicated Project Leads guide you through every step including planning, installation and revisions.

INSTALLATION

We outline your schedule and communication plan, and our team will oversee the production and installation processes to ensure they run smoothly. We are committed to finishing well through our team, and our partner installers, of courteous, prompt and professional installers.

Client#: 56204 OFFIC1

ACORD™ CERTIFICATE OF LIABILITY INSURANCE

DATE (MM/DD/YYYY) 6/26/2020

THIS CERTIFICATE IS ISSUED AS A MATTER OF INFORMATION ONLY AND CONFERS NO RIGHTS UPON THE CERTIFICATE HOLDER. THIS CERTIFICATE DOES NOT AFFIRMATIVELY OR NEGATIVELY AMEND, EXTEND OR ALTER THE COVERAGE AFFORDED BY THE POLICIES BELOW. THIS CERTIFICATE OF INSURANCE DOES NOT CONSTITUTE A CONTRACT BETWEEN THE ISSUING INSURER(S), AUTHORIZED REPRESENTATIVE OR PRODUCER, AND THE CERTIFICATE HOLDER.

IMPORTANT: If the certificate holder is an ADDITIONAL INSURED, the policy(ies) must have ADDITIONAL INSURED provisions or be endorsed. If SUBROGATION IS WAIVED, subject to the terms and conditions of the policy, certain policies may require an endorsement. A statement on this certificate does not confer any rights to the certificate holder in lieu of such endorsement(s).

PRODUCER
INSPRO Insurance
P.O. Box 6847
Lincoln, NE 68506
402 483-4500

CONTACT NAME: Will Hays
PHONE (A/C, No, Ext): 402-483-4500 FAX (A/C, No):
E-MAIL ADDRESS: whays@insproins.com

INSURER(S) AFFORDING COVERAGE	NAIC #
INSURER A : QBE Insurance Corporation	39217
INSURER B : SFM Mutual Insurance Co	11347
INSURER C :	
INSURER D :	
INSURER E :	
INSURER F :	

INSURED
Office Interiors and Design, Inc.
1401 Dahlberg Drive Suite A
Lincoln, NE 68512

COVERAGES CERTIFICATE NUMBER: REVISION NUMBER:

THIS IS TO CERTIFY THAT THE POLICIES OF INSURANCE LISTED BELOW HAVE BEEN ISSUED TO THE INSURED NAMED ABOVE FOR THE POLICY PERIOD INDICATED. NOTWITHSTANDING ANY REQUIREMENT, TERM OR CONDITION OF ANY CONTRACT OR OTHER DOCUMENT WITH RESPECT TO WHICH THIS CERTIFICATE MAY BE ISSUED OR MAY PERTAIN, THE INSURANCE AFFORDED BY THE POLICIES DESCRIBED HEREIN IS SUBJECT TO ALL THE TERMS, EXCLUSIONS AND CONDITIONS OF SUCH POLICIES. LIMITS SHOWN MAY HAVE BEEN REDUCED BY PAID CLAIMS.

INSR LTR	TYPE OF INSURANCE	ADDL INSR	SUBR WVD	POLICY NUMBER	POLICY EFF (MM/DD/YYYY)	POLICY EXP (MM/DD/YYYY)	LIMITS	
A	X COMMERCIAL GENERAL LIABILITY	X		BBP0006866	06/23/2020	06/23/2021	EACH OCCURRENCE	$1,000,000
	CLAIMS-MADE X OCCUR						DAMAGE TO RENTED PREMISES (Ea occurrence)	$100,000
							MED EXP (Any one person)	$5,000
							PERSONAL & ADV INJURY	$
	GEN'L AGGREGATE LIMIT APPLIES PER:						GENERAL AGGREGATE	$2,000,000
	POLICY PRO-JECT LOC						PRODUCTS - COMP/OP AGG	$2,000,000
	OTHER:							$
A	AUTOMOBILE LIABILITY			BCA0002728	06/23/2020	06/23/2021	COMBINED SINGLE LIMIT (Ea accident)	$1,000,000
	ANY AUTO						BODILY INJURY (Per person)	$
	OWNED AUTOS ONLY / X SCHEDULED AUTOS						BODILY INJURY (Per accident)	$
	X HIRED AUTOS ONLY / X NON-OWNED AUTOS ONLY						PROPERTY DAMAGE (Per accident)	$
								$
A	X UMBRELLA LIAB / X OCCUR			BUM0006540	06/23/2020	06/23/2021	EACH OCCURRENCE	$2,000,000
	EXCESS LIAB / CLAIMS-MADE						AGGREGATE	$2,000,000
	DED X RETENTION $0							$
B	WORKERS COMPENSATION AND EMPLOYERS' LIABILITY			94137202	12/11/2019	12/11/2020	X PER STATUTE / OTH-ER	
	ANY PROPRIETOR/PARTNER/EXECUTIVE OFFICER/MEMBER EXCLUDED? Y / N: Y (Mandatory in NH) If yes, describe under DESCRIPTION OF OPERATIONS below	N / A					E.L. EACH ACCIDENT	$500,000
							E.L. DISEASE - EA EMPLOYEE	$500,000
							E.L. DISEASE - POLICY LIMIT	$500,000
A	Inland Marin			BIM000317	06/23/2020	06/23/2021		

DESCRIPTION OF OPERATIONS / LOCATIONS / VEHICLES (ACORD 101, Additional Remarks Schedule, may be attached if more space is required)

** Workers Comp Information **
Other States Coverage
Proprietors/Partners/Executive Officers/Members Excluded:
Diane Pickerel, Owner 100%
Blanket Waiver of Subrogation
(See Attached Descriptions)

CERTIFICATE HOLDER

City of Lincoln - Lancaster
County, Lincoln-Lancaster County
Public Bldg Comm, 555 So. 10th
Street
Lincoln, NE 68508

CANCELLATION

SHOULD ANY OF THE ABOVE DESCRIBED POLICIES BE CANCELLED BEFORE THE EXPIRATION DATE THEREOF, NOTICE WILL BE DELIVERED IN ACCORDANCE WITH THE POLICY PROVISIONS.

AUTHORIZED REPRESENTATIVE

James D. Mibb d

© 1988-2015 ACORD CORPORATION. All rights reserved.

THIS ENDORSEMENT CHANGES THE POLICY. PLEASE READ IT CAREFULLY.

BLANKET ADDITIONAL INSURED — WHEN REQUIRED BY WRITTEN AGREEMENT

This endorsement modifies insurance provided under the following:

BUSINESSOWNERS COVERAGE FORM

Paragraph **C. Who is an insured** in **Section II — Liability**

A. Is amended to include as an additional insured any person or organization when you and such person or organization have agreed in writing in a contract or agreement that such person or organization be added as an additional insured on your policy. Such person or organization is an additional insured only with respect to liability for "bodily injury", "property damage" or "personal and advertising injury" caused, in whole or in part, by your acts or omissions or the acts or omissions or the acts or omissions of those acting on your behalf:

1. In the performance of your ongoing operations; or

2. In connection with your premises owned or rented to you.

B. The limits of insurance applicable to the additional Insured are those specified in the Declarations of this Policy or in the written contract, whichever is lower. These limits of insurance are inclusive of and not in addition to the limits of insurance shown in the Declarations.

C. Any coverage provided hereunder shall be excess over any other valid and collectible insurance available to the additional insured whether that insurance is primary, excess, contingent or on any other basis, unless you and the additional insured have specifically agreed in a written contract or written agreement that this insurance be primary.

When coverage is provided on a primary basis we will not seek contribution from any other insurance available to the additional insured if a written contract or written agreement requires that this insurance be noncontributory.

D. All other terms and conditions of this policy remain unchanged.

Includes copyrighted material of Insurance Services Office, Inc., with its permission.

THIS ENDORSEMENT CHANGES THE POLICY. PLEASE READ IT CAREFULLY.

WAIVER OF TRANSFER OF RIGHTS OF RECOVERY AGAINST OTHERS TO US

This endorsement modifies insurance provided under the following:

BUSINESSOWNERS COVERAGE FORM

SCHEDULE

Name Of Person Or Organization:
City of Lincoln Lancaster County and/or City of Lincoln/Lancaster County Public Building Commission 555 S 10th St Lincoln, NE 68508
Information required to complete this Schedule, if not shown above, will be shown in the Declarations.

Paragraph **K. Transfer Of Rights Of Recovery Against Others To Us** in **Section III – Common Policy Conditions** is amended by the addition of the following:

We waive any right of recovery we may have against the person or organization shown in the Schedule above because of payments we make for injury or damage arising out of your ongoing operations or "your work" done under a contract with that person or organization and included in the "products-completed operations hazard". This waiver applies only to the person or organization shown in the Schedule above.

© ISO Properties, Inc., 2004

SFM Safe Insurance Company
Workers' Compensation and Employers' Liability Policy

Waiver Of Our Right To Recover From Others Endorsement

This endorsement changes the policy to which it is attached effective on the inception date of the policy unless a different date is indicated below.

This endorsement, effective on **12/11/2018** at 12:01 A.M. standard time, forms a part of Policy **094137.202** issued to **Office Interiors and Design Inc.**

We have the right to recover our payments from anyone liable for an injury covered by this policy. We will not enforce our right against the person or organization named in the Schedule. (This agreement applies only to the extent that you perform work under a written contract that requires you to obtain this agreement from us.)

This agreement shall not operate directly or indirectly to benefit anyone not named in the Schedule.

SCHEDULE

This waiver of subrogation endorsement applies to the state of Nebraska and the City of Lincoln.

Blanket Waiver: The named insured agrees to waive all rights of subrogation against entities that have contractual requirements for such.

Client#: 56204 OFFIC1

ACORD™

CERTIFICATE OF LIABILITY INSURANCE

DATE (MM/DD/YYYY) 12/11/2019

THIS CERTIFICATE IS ISSUED AS A MATTER OF INFORMATION ONLY AND CONFERS NO RIGHTS UPON THE CERTIFICATE HOLDER. THIS CERTIFICATE DOES NOT AFFIRMATIVELY OR NEGATIVELY AMEND, EXTEND OR ALTER THE COVERAGE AFFORDED BY THE POLICIES BELOW. THIS CERTIFICATE OF INSURANCE DOES NOT CONSTITUTE A CONTRACT BETWEEN THE ISSUING INSURER(S), AUTHORIZED REPRESENTATIVE OR PRODUCER, AND THE CERTIFICATE HOLDER.

IMPORTANT: If the certificate holder is an ADDITIONAL INSURED, the policy(ies) must have ADDITIONAL INSURED provisions or be endorsed. If SUBROGATION IS WAIVED, subject to the terms and conditions of the policy, certain policies may require an endorsement. A statement on this certificate does not confer any rights to the certificate holder in lieu of such endorsement(s).

PRODUCER
INSPRO Insurance
P.O. Box 6847
Lincoln, NE 68506
402 483-4500

CONTACT NAME: Will Hays
PHONE (A/C, No, Ext): 402-483-4500 FAX (A/C, No): 402-484-3921
E-MAIL ADDRESS: whays@insproins.com

INSURER(S) AFFORDING COVERAGE	NAIC #
INSURER A : QBE Insurance Corporation	39217
INSURER B : SFM Mutual Insurance Co	11347
INSURER C :	
INSURER D :	
INSURER E :	
INSURER F :	

INSURED
Office Interiors and Design, Inc.
1401 Dahlberg Drive Suite A
Lincoln, NE 68512

COVERAGES CERTIFICATE NUMBER: REVISION NUMBER:

THIS IS TO CERTIFY THAT THE POLICIES OF INSURANCE LISTED BELOW HAVE BEEN ISSUED TO THE INSURED NAMED ABOVE FOR THE POLICY PERIOD INDICATED. NOTWITHSTANDING ANY REQUIREMENT, TERM OR CONDITION OF ANY CONTRACT OR OTHER DOCUMENT WITH RESPECT TO WHICH THIS CERTIFICATE MAY BE ISSUED OR MAY PERTAIN, THE INSURANCE AFFORDED BY THE POLICIES DESCRIBED HEREIN IS SUBJECT TO ALL THE TERMS, EXCLUSIONS AND CONDITIONS OF SUCH POLICIES. LIMITS SHOWN MAY HAVE BEEN REDUCED BY PAID CLAIMS.

INSR LTR	TYPE OF INSURANCE	ADDL INSR	SUBR WVD	POLICY NUMBER	POLICY EFF (MM/DD/YYYY)	POLICY EXP (MM/DD/YYYY)	LIMITS	
A	X COMMERCIAL GENERAL LIABILITY	X		BBP0006866	06/23/2019	06/23/2020	EACH OCCURRENCE	$1,000,000
	CLAIMS-MADE X OCCUR						DAMAGE TO RENTED PREMISES (Ea occurrence)	$100,000
							MED EXP (Any one person)	$5,000
							PERSONAL & ADV INJURY	$
	GEN'L AGGREGATE LIMIT APPLIES PER:						GENERAL AGGREGATE	$2,000,000
	POLICY PRO-JECT LOC						PRODUCTS - COMP/OP AGG	$2,000,000
	OTHER:							$
A	AUTOMOBILE LIABILITY			BCA0002728	06/23/2019	06/23/2020	COMBINED SINGLE LIMIT (Ea accident)	$1,000,000
	ANY AUTO						BODILY INJURY (Per person)	$
	OWNED AUTOS ONLY / X SCHEDULED AUTOS						BODILY INJURY (Per accident)	$
	X HIRED AUTOS ONLY / X NON-OWNED AUTOS ONLY						PROPERTY DAMAGE (Per accident)	$
								$
A	X UMBRELLA LIAB / X OCCUR			BUM0002960	06/23/2019	06/23/2020	EACH OCCURRENCE	$2,000,000
	EXCESS LIAB / CLAIMS-MADE						AGGREGATE	$2,000,000
	DED X RETENTION $0							$
B	WORKERS COMPENSATION AND EMPLOYERS' LIABILITY	N / A		94137202	12/11/2019	12/11/2020	X PER STATUTE / OTH-ER	
	ANY PROPRIETOR/PARTNER/EXECUTIVE OFFICER/MEMBER EXCLUDED? Y / N: Y (Mandatory in NH) If yes, describe under DESCRIPTION OF OPERATIONS below						E.L. EACH ACCIDENT	$500,000
							E.L. DISEASE - EA EMPLOYEE	$500,000
							E.L. DISEASE - POLICY LIMIT	$500,000
A	Inland Marin			BIM000317	06/23/2019	06/23/2020		

DESCRIPTION OF OPERATIONS / LOCATIONS / VEHICLES (ACORD 101, Additional Remarks Schedule, may be attached if more space is required)

** Workers Comp Information **
Other States Coverage
Proprietors/Partners/Executive Officers/Members Excluded:
Diane Pickerel, Owner 100%
Blanket Waiver of Subrogation
(See Attached Descriptions)

CERTIFICATE HOLDER

City of Lincoln - Lancaster County, Lincoln-Lancaster County Public Bldg Comm, 555 So. 10th Street
Lincoln, NE 68508

CANCELLATION

SHOULD ANY OF THE ABOVE DESCRIBED POLICIES BE CANCELLED BEFORE THE EXPIRATION DATE THEREOF, NOTICE WILL BE DELIVERED IN ACCORDANCE WITH THE POLICY PROVISIONS.

AUTHORIZED REPRESENTATIVE

© 1988-2015 ACORD CORPORATION. All rights reserved.

DESCRIPTIONS (Continued from Page 1)

** Supplemental Name **
First Supplemental Name applies to all policies - Office Interiors and Design, Inc.

City of Lincoln, Nebraska; Lancaster County, Nebraska; Lincoln-Lancaster County Public Building Commission are named as Additional Insured in regards to the general libaility coverage.

THIS ENDORSEMENT CHANGES THE POLICY. PLEASE READ IT CAREFULLY.

BLANKET ADDITIONAL INSURED — WHEN REQUIRED BY WRITTEN AGREEMENT

This endorsement modifies insurance provided under the following:

BUSINESSOWNERS COVERAGE FORM

Paragraph **C. Who is an insured** in **Section II — Liability**

A. Is amended to include as an additional insured any person or organization when you and such person or organization have agreed in writing in a contract or agreement that such person or organization be added as an additional insured on your policy. Such person or organization is an additional insured only with respect to liability for "bodily injury", "property damage" or "personal and advertising injury" caused, in whole or in part, by your acts or omissions or the acts or omissions or the acts or omissions of those acting on your behalf:

1. In the performance of your ongoing operations; or

2. In connection with your premises owned or rented to you.

B. The limits of insurance applicable to the additional Insured are those specified in the Declarations of this Policy or in the written contract, whichever is lower. These limits of insurance are inclusive of and not in addition to the limits of insurance shown in the Declarations.

C. Any coverage provided hereunder shall be excess over any other valid and collectible insurance available to the additional insured whether that insurance is primary, excess, contingent or on any other basis, unless you and the additional insured have specifically agreed in a written contract or written agreement that this insurance be primary.

When coverage is provided on a primary basis we will not seek contribution from any other insurance available to the additional insured if a written contract or written agreement requires that this insurance be noncontributory.

D. All other terms and conditions of this policy remain unchanged.

Includes copyrighted material of Insurance Services Office, Inc., with its permission.

SCHEDULE OF FORMS AND ENDORSEMENTS

POLICY NUMBER:	EFFECTIVE DATE:
BBP0006866-00	06/23/2019

NUMBER	TITLE
AH CI 8520 (12-18)	Commercial Insurance Policy Jacket
BP DS 01 (07-13)	Businessowners Policy Declarations
BP DS 01-S (07-13)	Supplemental Declarations Page
BP 00 03 (07-13)	Businessowners Coverage Form
BP IN 01 (07-13)	Businessowners Coverage Form Index
AH IL 8525 (09-17)	Fees And Surcharge Schedule
AH BP 80 04 (09-17)	Lead Liability Exclusion
AH BP 80 13 (09-17)	Businessowners Plus Endorsement
AH BP 80 54 (09-17)	Notice Of Terrorism Insurance Coverage
AH BP 80 57 (09-17)	Exclusion - Sunlamps And Tanning Beds
AH BP 80 58 (09-17)	Pollutants Definition Amendment
AH BP 80 73 (09-17)	Businessowners Enhancement Form
AH BP 80 84 (10-17)	Blanket Additional Insured - When Required By Written Agreement
AH BP 81 86 (09-17)	Asbestos Exclusion
AH BP 81 83 (09-17)	Nuclear, Biological, Chemical and Radiological Hazards Exclusion
AH BP 82 10 (09-17)	Equipment Breakdown Coverage
BP 01 12 (12-17)	Nebraska Changes
BP 04 02 (07-13)	Additional Insured - Managers Or Lessors Of Premises
BP 04 02 (07-13)	Additional Insured - Managers Or Lessors Of Premises
BP 04 17 (01-10)	Employment-related Practices Exclusion
BP 04 19 (07-13)	Amendment - Liquor Liability Exclusion - Exception For Scheduled Premises Or Activities
BP 04 39 (07-02)	Abuse or Molestation Exclusion
BP 04 41 (07-13)	Business Income Changes - Time Period
BP 04 50 (07-13)	Additional Insured - Owners, Lessees Or Contractors - Scheduled Person Or Organization
BP 04 52 (07-13)	Additional Insured - State Or Governmental Agency Or Subdivision Or Political Subdivisions - Permits Or Authorization
BP 04 83 (01-10)	Removal Of Insurance-to-value Provisions
BP 04 97 (01-06)	Waiver Of Transfer Of Rights Of Recovery Against Others To Us
BP 05 01 (07-02)	Calculation Of Premium
BP 05 15 (01-15)	Disclosure Pursuant To Terrorism Risk Insurance Act
BP 05 17 (01-06)	Exclusion - Silica Or Silica-Related Dust
BP 05 23 (01-15)	Cap On Losses From Certified Acts Of Terrorism
BP 05 38 (01-15)	Exclusion Of Other Acts Of Terrorism Committed Outside The United States; Cap On Losses From Certified Acts Of Terrorism
BP 05 42 (01-15)	Exclusion Of Punitive Damages Related To A Certified Act Of Terrorism
BP 05 77 (01-06)	Fungi Or Bacteria Exclusion (Liability)
BP 12 03 (01-10)	Loss Payable Clauses
BP 14 79 (07-13)	Specified Business Personal Property Temporarily Away From Premises

THIS ENDORSEMENT CHANGES THE POLICY. PLEASE READ IT CAREFULLY.

DESIGNATED INSURED FOR COVERED AUTOS LIABILITY COVERAGE

This endorsement modifies insurance provided under the following:

AUTO DEALERS COVERAGE FORM
BUSINESS AUTO COVERAGE FORM
MOTOR CARRIER COVERAGE FORM

With respect to coverage provided by this endorsement, the provisions of the Coverage Form apply unless modified by this endorsement.

This endorsement identifies person(s) or organization(s) who are "insureds" for Covered Autos Liability Coverage under the Who Is An Insured provision of the Coverage Form. This endorsement does not alter coverage provided in the Coverage Form.

This endorsement changes the policy effective on the inception date of the policy unless another date is indicated below.

Named Insured: Office Interiors and Design Inc

Endorsement Effective Date: 06/23/2019

SCHEDULE

Name Of Person(s) Or Organization(s):

City of Lincoln and/or Lancaster County and/or City of Lincoln/Lancaster County
Pubic Building Commission
555 S 10th St
Lincoln, NE 68508

Information required to complete this Schedule, if not shown above, will be shown in the Declarations.

Each person or organization shown in the Schedule is an "insured" for Covered Autos Liability Coverage, but only to the extent that person or organization qualifies as an "insured" under the Who Is An Insured provision contained in Paragraph **A.1.** of Section **II** – Covered Autos Liability Coverage in the Business Auto and Motor Carrier Coverage Forms and Paragraph **D.2.** of Section **I** – Covered Autos Coverages of the Auto Dealers Coverage Form.

© Insurance Services Office, Inc., 2011

THIS ENDORSEMENT CHANGES THE POLICY. PLEASE READ IT CAREFULLY.

WAIVER OF TRANSFER OF RIGHTS OF RECOVERY AGAINST OTHERS TO US

This endorsement modifies insurance provided under the following:

BUSINESSOWNERS COVERAGE FORM

SCHEDULE

Name Of Person Or Organization:
City of Lincoln Lancaster County and/or City of Lincoln/Lancaster County Public Building Commission 555 S 10th St Lincoln, NE 68508
Information required to complete this Schedule, if not shown above, will be shown in the Declarations.

Paragraph **K. Transfer Of Rights Of Recovery Against Others To Us** in **Section III – Common Policy Conditions** is amended by the addition of the following:

We waive any right of recovery we may have against the person or organization shown in the Schedule above because of payments we make for injury or damage arising out of your ongoing operations or "your work" done under a contract with that person or organization and included in the "products-completed operations hazard". This waiver applies only to the person or organization shown in the Schedule above.

© ISO Properties, Inc., 2004

SFM Safe Insurance Company
Workers' Compensation and Employers' Liability Policy

Waiver Of Our Right To Recover From Others Endorsement

This endorsement changes the policy to which it is attached effective on the inception date of the policy unless a different date is indicated below.

This endorsement, effective on **12/11/2018** at 12:01 A.M. standard time, forms a part of Policy **094137.202** issued to **Office Interiors and Design Inc.**

We have the right to recover our payments from anyone liable for an injury covered by this policy. We will not enforce our right against the person or organization named in the Schedule. (This agreement applies only to the extent that you perform work under a written contract that requires you to obtain this agreement from us.)

This agreement shall not operate directly or indirectly to benefit anyone not named in the Schedule.

SCHEDULE

This waiver of subrogation endorsement applies to the state of Nebraska and the City of Lincoln.

Blanket Waiver: The named insured agrees to waive all rights of subrogation against entities that have contractual requirements for such.

DESCRIPTIONS (Continued from Page 1)

**** Supplemental Name ****
First Supplemental Name applies to all policies - Office Interiors and Design, Inc.

City of Lincoln, Nebraska; Lancaster County, Nebraska; Lincoln-Lancaster County Public Building Commission are named as Additional Insured in regards to the general libaility coverage.

THIS ENDORSEMENT CHANGES THE POLICY. PLEASE READ IT CAREFULLY.

BLANKET ADDITIONAL INSURED — WHEN REQUIRED BY WRITTEN AGREEMENT

This endorsement modifies insurance provided under the following:

BUSINESSOWNERS COVERAGE FORM

Paragraph **C. Who is an insured** in **Section II — Liability**

A. Is amended to include as an additional insured any person or organization when you and such person or organization have agreed in writing in a contract or agreement that such person or organization be added as an additional insured on your policy. Such person or organization is an additional insured only with respect to liability for "bodily injury", "property damage" or "personal and advertising injury" caused, in whole or in part, by your acts or omissions or the acts or omissions or the acts or omissions of those acting on your behalf:

1. In the performance of your ongoing operations; or

2. In connection with your premises owned or rented to you.

B. The limits of insurance applicable to the additional Insured are those specified in the Declarations of this Policy or in the written contract, whichever is lower. These limits of insurance are inclusive of and not in addition to the limits of insurance shown in the Declarations.

C. Any coverage provided hereunder shall be excess over any other valid and collectible insurance available to the additional insured whether that insurance is primary, excess, contingent or on any other basis, unless you and the additional insured have specifically agreed in a written contract or written agreement that this insurance be primary.

When coverage is provided on a primary basis we will not seek contribution from any other insurance available to the additional insured if a written contract or written agreement requires that this insurance be noncontributory.

D. All other terms and conditions of this policy remain unchanged.

Includes copyrighted material of Insurance Services Office, Inc., with its permission.

THIS ENDORSEMENT CHANGES THE POLICY. PLEASE READ IT CAREFULLY.

WAIVER OF TRANSFER OF RIGHTS OF RECOVERY AGAINST OTHERS TO US

This endorsement modifies insurance provided under the following:

BUSINESSOWNERS COVERAGE FORM

SCHEDULE

Name Of Person Or Organization:
City of Lincoln Lancaster County and/or City of Lincoln/Lancaster County Public Building Commission 555 S 10th St Lincoln, NE 68508
Information required to complete this Schedule, if not shown above, will be shown in the Declarations.

Paragraph **K. Transfer Of Rights Of Recovery Against Others To Us** in **Section III – Common Policy Conditions** is amended by the addition of the following:

We waive any right of recovery we may have against the person or organization shown in the Schedule above because of payments we make for injury or damage arising out of your ongoing operations or "your work" done under a contract with that person or organization and included in the "products-completed operations hazard". This waiver applies only to the person or organization shown in the Schedule above.

© ISO Properties, Inc., 2004

SFM Safe Insurance Company
Workers' Compensation and Employers' Liability Policy

Waiver Of Our Right To Recover From Others Endorsement

This endorsement changes the policy to which it is attached effective on the inception date of the policy unless a different date is indicated below.

This endorsement, effective on **12/11/2018** at 12:01 A.M. standard time, forms a part of Policy **094137.202** issued to **Office Interiors and Design Inc.**

We have the right to recover our payments from anyone liable for an injury covered by this policy. We will not enforce our right against the person or organization named in the Schedule. (This agreement applies only to the extent that you perform work under a written contract that requires you to obtain this agreement from us.)

This agreement shall not operate directly or indirectly to benefit anyone not named in the Schedule.

SCHEDULE

This waiver of subrogation endorsement applies to the state of Nebraska and the City of Lincoln.

Blanket Waiver: The named insured agrees to waive all rights of subrogation against entities that have contractual requirements for such.

Client#: 56204 OFFIC1

ACORD™

CERTIFICATE OF LIABILITY INSURANCE

DATE (MM/DD/YYYY) 12/11/2019

THIS CERTIFICATE IS ISSUED AS A MATTER OF INFORMATION ONLY AND CONFERS NO RIGHTS UPON THE CERTIFICATE HOLDER. THIS CERTIFICATE DOES NOT AFFIRMATIVELY OR NEGATIVELY AMEND, EXTEND OR ALTER THE COVERAGE AFFORDED BY THE POLICIES BELOW. THIS CERTIFICATE OF INSURANCE DOES NOT CONSTITUTE A CONTRACT BETWEEN THE ISSUING INSURER(S), AUTHORIZED REPRESENTATIVE OR PRODUCER, AND THE CERTIFICATE HOLDER.

IMPORTANT: If the certificate holder is an ADDITIONAL INSURED, the policy(ies) must have ADDITIONAL INSURED provisions or be endorsed. If SUBROGATION IS WAIVED, subject to the terms and conditions of the policy, certain policies may require an endorsement. A statement on this certificate does not confer any rights to the certificate holder in lieu of such endorsement(s).

PRODUCER
INSPRO Insurance
P.O. Box 6847
Lincoln, NE 68506
402 483-4500

CONTACT NAME: Will Hays
PHONE (A/C, No, Ext): 402-483-4500 FAX (A/C, No): 402-484-3921
E-MAIL ADDRESS: whays@insproins.com

INSURER(S) AFFORDING COVERAGE	NAIC #
INSURER A : QBE Insurance Corporation	39217
INSURER B : SFM Mutual Insurance Co	11347
INSURER C :	
INSURER D :	
INSURER E :	
INSURER F :	

INSURED
Office Interiors and Design, Inc.
1401 Dahlberg Drive Suite A
Lincoln, NE 68512

COVERAGES CERTIFICATE NUMBER: REVISION NUMBER:

THIS IS TO CERTIFY THAT THE POLICIES OF INSURANCE LISTED BELOW HAVE BEEN ISSUED TO THE INSURED NAMED ABOVE FOR THE POLICY PERIOD INDICATED. NOTWITHSTANDING ANY REQUIREMENT, TERM OR CONDITION OF ANY CONTRACT OR OTHER DOCUMENT WITH RESPECT TO WHICH THIS CERTIFICATE MAY BE ISSUED OR MAY PERTAIN, THE INSURANCE AFFORDED BY THE POLICIES DESCRIBED HEREIN IS SUBJECT TO ALL THE TERMS, EXCLUSIONS AND CONDITIONS OF SUCH POLICIES. LIMITS SHOWN MAY HAVE BEEN REDUCED BY PAID CLAIMS.

INSR LTR	TYPE OF INSURANCE	ADDL INSR	SUBR WVD	POLICY NUMBER	POLICY EFF (MM/DD/YYYY)	POLICY EXP (MM/DD/YYYY)	LIMITS	
A	X COMMERCIAL GENERAL LIABILITY	X		BBP0006866	06/23/2019	06/23/2020	EACH OCCURRENCE	$1,000,000
	CLAIMS-MADE X OCCUR						DAMAGE TO RENTED PREMISES (Ea occurrence)	$100,000
							MED EXP (Any one person)	$5,000
							PERSONAL & ADV INJURY	$
	GEN'L AGGREGATE LIMIT APPLIES PER:						GENERAL AGGREGATE	$2,000,000
	POLICY PRO-JECT LOC						PRODUCTS - COMP/OP AGG	$2,000,000
	OTHER:							$
A	AUTOMOBILE LIABILITY			BCA0002728	06/23/2019	06/23/2020	COMBINED SINGLE LIMIT (Ea accident)	$1,000,000
	ANY AUTO						BODILY INJURY (Per person)	$
	OWNED AUTOS ONLY / X SCHEDULED AUTOS						BODILY INJURY (Per accident)	$
	X HIRED AUTOS ONLY / X NON-OWNED AUTOS ONLY						PROPERTY DAMAGE (Per accident)	$
								$
A	X UMBRELLA LIAB / X OCCUR			BUM0002960	06/23/2019	06/23/2020	EACH OCCURRENCE	$2,000,000
	EXCESS LIAB / CLAIMS-MADE						AGGREGATE	$2,000,000
	DED X RETENTION $0							$
B	WORKERS COMPENSATION AND EMPLOYERS' LIABILITY	N / A		94137202	12/11/2019	12/11/2020	X PER STATUTE / OTH-ER	
	ANY PROPRIETOR/PARTNER/EXECUTIVE OFFICER/MEMBER EXCLUDED? Y / N: Y (Mandatory in NH) If yes, describe under DESCRIPTION OF OPERATIONS below						E.L. EACH ACCIDENT	$500,000
							E.L. DISEASE - EA EMPLOYEE	$500,000
							E.L. DISEASE - POLICY LIMIT	$500,000
A	Inland Marin			BIM000317	06/23/2019	06/23/2020		

DESCRIPTION OF OPERATIONS / LOCATIONS / VEHICLES (ACORD 101, Additional Remarks Schedule, may be attached if more space is required)

** Workers Comp Information **
Other States Coverage
Proprietors/Partners/Executive Officers/Members Excluded:
Diane Pickerel, Owner 100%
Blanket Waiver of Subrogation
(See Attached Descriptions)

CERTIFICATE HOLDER

City of Lincoln - Lancaster County, Lincoln-Lancaster County Public Bldg Comm, 555 So. 10th Street
Lincoln, NE 68508

CANCELLATION

SHOULD ANY OF THE ABOVE DESCRIBED POLICIES BE CANCELLED BEFORE THE EXPIRATION DATE THEREOF, NOTICE WILL BE DELIVERED IN ACCORDANCE WITH THE POLICY PROVISIONS.

AUTHORIZED REPRESENTATIVE

© 1988-2015 ACORD CORPORATION. All rights reserved.

DESCRIPTIONS (Continued from Page 1)

** Supplemental Name **
First Supplemental Name applies to all policies - Office Interiors and Design, Inc.

City of Lincoln, Nebraska; Lancaster County, Nebraska; Lincoln-Lancaster County Public Building Commission are named as Additional Insured in regards to the general libaility coverage.

THIS ENDORSEMENT CHANGES THE POLICY. PLEASE READ IT CAREFULLY.

BLANKET ADDITIONAL INSURED — WHEN REQUIRED BY WRITTEN AGREEMENT

This endorsement modifies insurance provided under the following:

BUSINESSOWNERS COVERAGE FORM

Paragraph **C. Who is an insured** in **Section II — Liability**

A. Is amended to include as an additional insured any person or organization when you and such person or organization have agreed in writing in a contract or agreement that such person or organization be added as an additional insured on your policy. Such person or organization is an additional insured only with respect to liability for "bodily injury", "property damage" or "personal and advertising injury" caused, in whole or in part, by your acts or omissions or the acts or omissions or the acts or omissions of those acting on your behalf:

1. In the performance of your ongoing operations; or

2. In connection with your premises owned or rented to you.

B. The limits of insurance applicable to the additional Insured are those specified in the Declarations of this Policy or in the written contract, whichever is lower. These limits of insurance are inclusive of and not in addition to the limits of insurance shown in the Declarations.

C. Any coverage provided hereunder shall be excess over any other valid and collectible insurance available to the additional insured whether that insurance is primary, excess, contingent or on any other basis, unless you and the additional insured have specifically agreed in a written contract or written agreement that this insurance be primary.

When coverage is provided on a primary basis we will not seek contribution from any other insurance available to the additional insured if a written contract or written agreement requires that this insurance be noncontributory.

D. All other terms and conditions of this policy remain unchanged.

Includes copyrighted material of Insurance Services Office, Inc., with its permission.

SCHEDULE OF FORMS AND ENDORSEMENTS

POLICY NUMBER:	EFFECTIVE DATE:
BBP0006866-00	06/23/2019

NUMBER	TITLE
AH CI 8520 (12-18)	Commercial Insurance Policy Jacket
BP DS 01 (07-13)	Businessowners Policy Declarations
BP DS 01-S (07-13)	Supplemental Declarations Page
BP 00 03 (07-13)	Businessowners Coverage Form
BP IN 01 (07-13)	Businessowners Coverage Form Index
AH IL 8525 (09-17)	Fees And Surcharge Schedule
AH BP 80 04 (09-17)	Lead Liability Exclusion
AH BP 80 13 (09-17)	Businessowners Plus Endorsement
AH BP 80 54 (09-17)	Notice Of Terrorism Insurance Coverage
AH BP 80 57 (09-17)	Exclusion - Sunlamps And Tanning Beds
AH BP 80 58 (09-17)	Pollutants Definition Amendment
AH BP 80 73 (09-17)	Businessowners Enhancement Form
AH BP 80 84 (10-17)	Blanket Additional Insured - When Required By Written Agreement
AH BP 81 86 (09-17)	Asbestos Exclusion
AH BP 81 83 (09-17)	Nuclear, Biological, Chemical and Radiological Hazards Exclusion
AH BP 82 10 (09-17)	Equipment Breakdown Coverage
BP 01 12 (12-17)	Nebraska Changes
BP 04 02 (07-13)	Additional Insured - Managers Or Lessors Of Premises
BP 04 02 (07-13)	Additional Insured - Managers Or Lessors Of Premises
BP 04 17 (01-10)	Employment-related Practices Exclusion
BP 04 19 (07-13)	Amendment - Liquor Liability Exclusion - Exception For Scheduled Premises Or Activities
BP 04 39 (07-02)	Abuse or Molestation Exclusion
BP 04 41 (07-13)	Business Income Changes - Time Period
BP 04 50 (07-13)	Additional Insured - Owners, Lessees Or Contractors - Scheduled Person Or Organization
BP 04 52 (07-13)	Additional Insured - State Or Governmental Agency Or Subdivision Or Political Subdivisions - Permits Or Authorization
BP 04 83 (01-10)	Removal Of Insurance-to-value Provisions
BP 04 97 (01-06)	Waiver Of Transfer Of Rights Of Recovery Against Others To Us
BP 05 01 (07-02)	Calculation Of Premium
BP 05 15 (01-15)	Disclosure Pursuant To Terrorism Risk Insurance Act
BP 05 17 (01-06)	Exclusion - Silica Or Silica-Related Dust
BP 05 23 (01-15)	Cap On Losses From Certified Acts Of Terrorism
BP 05 38 (01-15)	Exclusion Of Other Acts Of Terrorism Committed Outside The United States; Cap On Losses From Certified Acts Of Terrorism
BP 05 42 (01-15)	Exclusion Of Punitive Damages Related To A Certified Act Of Terrorism
BP 05 77 (01-06)	Fungi Or Bacteria Exclusion (Liability)
BP 12 03 (01-10)	Loss Payable Clauses
BP 14 79 (07-13)	Specified Business Personal Property Temporarily Away From Premises

THIS ENDORSEMENT CHANGES THE POLICY. PLEASE READ IT CAREFULLY.

DESIGNATED INSURED FOR COVERED AUTOS LIABILITY COVERAGE

This endorsement modifies insurance provided under the following:

AUTO DEALERS COVERAGE FORM
BUSINESS AUTO COVERAGE FORM
MOTOR CARRIER COVERAGE FORM

With respect to coverage provided by this endorsement, the provisions of the Coverage Form apply unless modified by this endorsement.

This endorsement identifies person(s) or organization(s) who are "insureds" for Covered Autos Liability Coverage under the Who Is An Insured provision of the Coverage Form. This endorsement does not alter coverage provided in the Coverage Form.

This endorsement changes the policy effective on the inception date of the policy unless another date is indicated below.

Named Insured: Office Interiors and Design Inc

Endorsement Effective Date: 06/23/2019

SCHEDULE

Name Of Person(s) Or Organization(s):

City of Lincoln and/or Lancaster County and/or City of Lincoln/Lancaster County
Pubic Building Commission
555 S 10th St
Lincoln, NE 68508

Information required to complete this Schedule, if not shown above, will be shown in the Declarations.

Each person or organization shown in the Schedule is an "insured" for Covered Autos Liability Coverage, but only to the extent that person or organization qualifies as an "insured" under the Who Is An Insured provision contained in Paragraph **A.1.** of Section **II** – Covered Autos Liability Coverage in the Business Auto and Motor Carrier Coverage Forms and Paragraph **D.2.** of Section **I** – Covered Autos Coverages of the Auto Dealers Coverage Form.

© Insurance Services Office, Inc., 2011

THIS ENDORSEMENT CHANGES THE POLICY. PLEASE READ IT CAREFULLY.

WAIVER OF TRANSFER OF RIGHTS OF RECOVERY AGAINST OTHERS TO US

This endorsement modifies insurance provided under the following:

BUSINESSOWNERS COVERAGE FORM

SCHEDULE

Name Of Person Or Organization:
City of Lincoln Lancaster County and/or City of Lincoln/Lancaster County Public Building Commission 555 S 10th St Lincoln, NE 68508
Information required to complete this Schedule, if not shown above, will be shown in the Declarations.

Paragraph **K. Transfer Of Rights Of Recovery Against Others To Us** in **Section III – Common Policy Conditions** is amended by the addition of the following:

We waive any right of recovery we may have against the person or organization shown in the Schedule above because of payments we make for injury or damage arising out of your ongoing operations or "your work" done under a contract with that person or organization and included in the "products-completed operations hazard". This waiver applies only to the person or organization shown in the Schedule above.

© ISO Properties, Inc., 2004

SFM Safe Insurance Company
Workers' Compensation and Employers' Liability Policy

Waiver Of Our Right To Recover From Others Endorsement

This endorsement changes the policy to which it is attached effective on the inception date of the policy unless a different date is indicated below.

This endorsement, effective on **12/11/2018** at 12:01 A.M. standard time, forms a part of Policy **094137.202** issued to **Office Interiors and Design Inc.**

We have the right to recover our payments from anyone liable for an injury covered by this policy. We will not enforce our right against the person or organization named in the Schedule. (This agreement applies only to the extent that you perform work under a written contract that requires you to obtain this agreement from us.)

This agreement shall not operate directly or indirectly to benefit anyone not named in the Schedule.

SCHEDULE

This waiver of subrogation endorsement applies to the state of Nebraska and the City of Lincoln.

Blanket Waiver: The named insured agrees to waive all rights of subrogation against entities that have contractual requirements for such.

AMENDMENT TO CONTRACT
Annual Supply
Office Seating
Bid No. 18-117
City of Lincoln, Lancaster County and
City of Lincoln-Lancaster County Public Building Commission
Price Increase
encompas

This Amendment is hereby entered into by and between encompas, 707 S 15th Street, Omaha, NE 68102 (hereinafter "Contractor") and the City of Lincoln, Lancaster County and the City of Lincoln-Lancaster County Public Building Commission (hereinafter "Owners"), for the purpose of amending the Contract dated June 19, 2018, executed under City Executive Order No. 91945, and County Contract C-18-0288, dated June 19, 2018, and executed by the City of Lincoln-Lancaster County Public Building Commission, on July 10, 2018, for Annual Supply - Office Seating, Bid No. 18-117, which is made a part of this amendment by this reference.

WHEREAS, the parties hereby amend the Contract to reflect a 2.5% price increase, per Attachment A; and

WHEREAS, the expenditures for the City of Lincoln will remain the same for the remainder of this current Contract term; and

WHEREAS, the expenditures for Lancaster County will remain the same for the remainder of this current Contract term; and

WHEREAS, the expenditures for the City of Lincoln-Lancaster County Public Building Commission will remain the same for the remainder of this current Contract term; and

NOW, THEREFORE, IN CONSIDERATION of the mutual covenants contained in the Contract, under City Executive Order No. 91945, and County Contract C-18-0288 and stated herein the parties agree as follows:

1) The parties hereby amend the Contract to reflect a 2.5% price increase, per Attachment A.
2) The expenditures for the City of Lincoln will remain the same for the remainder of this current Contract term.
3) The expenditures for Lancaster County will remain the same for the remainder of this current Contract term.
4) The expenditures for the City of Lincoln-Lancaster County Public Building Commission will remain the same for the remainder of this current Contract term.
5) All other terms of the Contract, not in conflict with this Amendment, shall remain in full force and effect.

The Parties do hereby agree to all the terms and conditions of this Amendment. This Amendment shall be binding upon the parties, their heirs, administrators, executors, legal and personal representatives, successors, and assigns.

IN WITNESS WHEREOF, the Parties do hereby execute this Amendment upon completion of signatures on:

Vendor Signature Page
City of Lincoln Signature Page
Lancaster County Signature Page
City of Lincoln-Lancaster County Public Building Commission Signature Page

Tracking No. 20080052

Vendor Signature Page

AMENDMENT TO CONTRACT
Annual Supply
Office Seating
Bid No. 18-117
City of Lincoln, Lancaster County and
City of Lincoln-Lancaster County Public Building Commission
Price Increase
encompas

Please sign, date and return within 5 days of receipt.

Mail to: City/County Purchasing
Attn: Brianne Crooks
440 So. 8th St., Ste. 200
Lincoln, NE 68508
Or email to: bcrooks@lincoln.ne.gov

Company Name:	encompas
By: (Please Sign)	
By: (Please Print)	HERMAN WEST
Title:	PRINCIPAL
Company Address:	1425 JONES
Company Phone & Fax:	402.991.7471 f. 402.991.7472
E-Mail Address:	herman@encompas.com
Date:	8.7.2020
Contact Person for Service or Orders	WENDY O'BRIEN
Contact Phone Number	402.499.7251

City of Lincoln Signature Page

AMENDMENT TO CONTRACT
Annual Supply
Office Seating
Bid No. 18-117
City of Lincoln, Lancaster County and
City of Lincoln-Lancaster County Public Building Commission
Price Increase
encompas

EXECUTION BY THE CITY OF LINCOLN, NEBRASKA

ATTEST:

_____
City Clerk

CITY OF LINCOLN, NEBRASKA

_____
Finance Director

Approved by Directorial Order No._____

dated _____

Lancaster County Signature Page

AMENDMENT TO CONTRACT
Annual Supply
Office Seating
Bid No. 18-117
City of Lincoln, Lancaster County and
City of Lincoln-Lancaster County Public Building Commission
Price Increase
encompas

EXECUTION BY LANCASTER COUNTY, NEBRASKA

Contract Approved as to Form:

_____
Deputy Lancaster County Attorney

The Board of County Commissioners of
Lancaster, Nebraska

_____

_____

_____

_____

_____

dated _____

City of Lincoln-Lancaster County Public Building Commission
Signature Page

AMENDMENT TO CONTRACT
Annual Supply
Office Seating
Bid No. 18-117
City of Lincoln, Lancaster County and
City of Lincoln-Lancaster County Public Building Commission
Price Increase
encompas

EXECUTION BY LINCOLN-LANCASTER COUNTY PUBLIC BUILDING COMMISSION

ATTEST:

_____	_____
Public Building Commission Attorney	Chairperson, Public Building Commission
	dated _____

HAWORTH

One Haworth Center
Holland, Michigan
49423-9576 USA

phone 616.393.3000
fax 616.393.1570

haworth.com

January 28, 2019

City of Lincoln
Purchasing Agent
440 S. 8th Street, Ste 200
Lincoln, NE 68508

Dear City of Lincoln:

Subject: **APRIL 2019 HAWORTH NORTH AMERICA PRICE ADJUSTMENT**

Over the last year Haworth has continued to experience sustained impact in material (some of which is tariff related), labor, healthcare and transportation costs. While we continue to focus on delivering our industry's best value, these increases have outpaced our ability to absorb them. Haworth is committed to providing you with innovative workspace products and services. We continue to believe that our solutions can dramatically improve the quality of your office environment, the effectiveness of your employees and your overall return on investment.

Therefore, Haworth will be adjusting its commercial prices effective April 1, 2019. While some prices are not changing, the overall increase is an average of 2.5%. This price adjustment excludes some of our Haworth Collection partner products which may be adjusted at a later date. In accordance with the terms of your sales agreement, this letter serves as advance notice of the price adjustment. Your Haworth representative is available to answer any questions you may have about this adjustment.

Haworth appreciates your business. We pledge to continue to invest the necessary energy and resources to help you create truly fluid environments that look great and keep you in front of change. We look forward to supporting your continued success.

Sincerely,

HAWORTH, INC.

Paul Nemschoff
Vice President – Global Strategy and Marketing
HAWORTH, INC.

encompas

1

Haworth: Zody Task Chair

Order: # SZT-20-724MA5 $645.34

(Delivery: $52.50 for 1st chair…….$14.50 for each additional chair on same order)

Fabric:_____*(example: **Barque / Willow 7-WL** …..see Seating Fabric pattern cards)*

Trim:_____ Black / TR-F Smoke / TR-E

*(example: **Black / TR-F**…….see options above)*

Mesh Back:_____ Comfort / MA-2 Gusto / MA-5 Calm/ MA-9

Hush / MA-10 Relax / MA-4 Joy / MA-11 Support / MA-1

Wellness / MA-3 Tranquil / MA-12 Zen / MA-13

(*example: **Relax / MA-4**…….see options above & Zody Mesh sample ring)*

Base: Black / TR-F

707 south 15th street
omaha, nebraska 68102
t: 402.991.7471
F: 402.991.7472

encompas

2

Haworth: Improv H.E. Task Chair

Order: # M251-1G43 $748.17

(Delivery: $52.50 for 1st chair…….$14.50 for each additional chair on same order)

Fabric:_____*(example: **Blanket / Beach 4H-BE**…..see 11 Seating Fabric pattern cards)*

Trim:_____*(example: **Black / TR-F**……..see options below)*

Black / TR-F

Graphite / TR-J

Grey Tone / TR-G

1425 jones street
omaha, nebraska 68102
t: 402.991.7471
F: 402.991.7472

encompas

3

Haworth: Fern Task Chair

Order: # SFT-U0-7S11A5 $717.95

(Delivery: $52.50 for 1st chair…….$14.50 for each additional chair on same order)

Fabric:_____*(example: **Blanket / Beach 4H-BE** …..see Seating Fabric pattern cards)*

Trim:_____ Black / TR-F Fog / TR-7

*(example: **Black / TR-F**…….see options above)*

Mesh Back:_____ Beach /MB-BE Cornflower /MB-CF

Loam/ MB-LM Moonflower /MB-MF Mulch /MB-MU

Mushroom / MB-MR Peat Moss / MB-PM River Rock / MB-RR

Sedum / MB-SE Silver Leaf / MB-SL Sunflower / MB-SU

(*example: **Beach / MB-BE**…….see options above & Fern Mesh sample ring)*

Base:_____ Pitch / TR-TF Metallic Champagne / TR-MC

Metallic Silver / TR-LE

*(example: **Metallic Silver / TR-LE**…….see options above & on Finishes card)*

1425 jones street
omaha, nebraska 68102
t: 402.991.7471
F: 402.991.7472

encompas

1

Haworth: Soji Task Chair

Order: # SJT-20-714A5A $402.93

(Delivery: $52.50 for 1st chair…….$14.50 for each additional chair on same order)

Fabric:_____*(example: **Blanket / Beach 4H-BE**…..see Seating Fabric pattern cards)*

Trim:_____ Black / TR-F Fog / TR-7 Snow / TR-FM

*(example: **Black / TR-F**……..see options above)*

Mesh Back:_____

Carbon / XT-1 Cayenne / XT-2 Clay / XT-3

Juniper / XT-4 Mist / XT-5 Navy / XT-6 Ocean / XT-7

Pumpkin / XT-8 Steel / XT-9 Stone / XT-10 Water / XT-11

(*example: **Carbon / XT-1**……..see options above & Soji Mesh sample ring)*

Base: Black / TR-F Fog / TR-7

1425 jones street
omaha, nebraska 68102
t: 402.991.7471
F: 402.991.7472

Client#: 11162 ENCOMCOR

ACORD™ CERTIFICATE OF LIABILITY INSURANCE

DATE (MM/DD/YYYY) 6/23/2020

THIS CERTIFICATE IS ISSUED AS A MATTER OF INFORMATION ONLY AND CONFERS NO RIGHTS UPON THE CERTIFICATE HOLDER. THIS CERTIFICATE DOES NOT AFFIRMATIVELY OR NEGATIVELY AMEND, EXTEND OR ALTER THE COVERAGE AFFORDED BY THE POLICIES BELOW. THIS CERTIFICATE OF INSURANCE DOES NOT CONSTITUTE A CONTRACT BETWEEN THE ISSUING INSURER(S), AUTHORIZED REPRESENTATIVE OR PRODUCER, AND THE CERTIFICATE HOLDER.

IMPORTANT: If the certificate holder is an ADDITIONAL INSURED, the policy(ies) must have ADDITIONAL INSURED provisions or be endorsed. If SUBROGATION IS WAIVED, subject to the terms and conditions of the policy, certain policies may require an endorsement. A statement on this certificate does not confer any rights to the certificate holder in lieu of such endorsement(s).

PRODUCER
Haas & Wilkerson Insurance
4300 Shawnee Mission Parkway
Fairway, KS 66205
913 432-4400

CONTACT NAME: Kathleen Kramer
PHONE (A/C, No, Ext): 913 676-9224 FAX (A/C, No):
E-MAIL ADDRESS: HWCertificates@hwins.com

INSURER(S) AFFORDING COVERAGE	NAIC #
INSURER A : Hartford Casualty Insurance Company	29424
INSURER B : Hartford Accident & Indemnity Co.	22357
INSURER C : Sentinel Insurance Company LTD	11000
INSURER D :	
INSURER E :	
INSURER F :	

INSURED
encompas corporation
1512 Grand Blvd
Kansas City, MO 64108

COVERAGES CERTIFICATE NUMBER: REVISION NUMBER:

THIS IS TO CERTIFY THAT THE POLICIES OF INSURANCE LISTED BELOW HAVE BEEN ISSUED TO THE INSURED NAMED ABOVE FOR THE POLICY PERIOD INDICATED. NOTWITHSTANDING ANY REQUIREMENT, TERM OR CONDITION OF ANY CONTRACT OR OTHER DOCUMENT WITH RESPECT TO WHICH THIS CERTIFICATE MAY BE ISSUED OR MAY PERTAIN, THE INSURANCE AFFORDED BY THE POLICIES DESCRIBED HEREIN IS SUBJECT TO ALL THE TERMS, EXCLUSIONS AND CONDITIONS OF SUCH POLICIES. LIMITS SHOWN MAY HAVE BEEN REDUCED BY PAID CLAIMS.

INSR LTR	TYPE OF INSURANCE	ADDL INSR	SUBR WVD	POLICY NUMBER	POLICY EFF (MM/DD/YYYY)	POLICY EXP (MM/DD/YYYY)	LIMITS	
A	X COMMERCIAL GENERAL LIABILITY			37SBARG7859	01/05/2020	01/05/2021	EACH OCCURRENCE	$2,000,000
	CLAIMS-MADE X OCCUR						DAMAGE TO RENTED PREMISES (Ea occurrence)	$300,000
							MED EXP (Any one person)	$10,000
							PERSONAL & ADV INJURY	$2,000,000
	GEN'L AGGREGATE LIMIT APPLIES PER:						GENERAL AGGREGATE	$4,000,000
	POLICY X PRO-JECT LOC						PRODUCTS - COMP/OP AGG	$4,000,000
	OTHER:							$
C	AUTOMOBILE LIABILITY			37UECVT6194	01/05/2020	01/05/2021	COMBINED SINGLE LIMIT (Ea accident)	$1,000,000
	X ANY AUTO						BODILY INJURY (Per person)	$
	OWNED AUTOS ONLY / SCHEDULED AUTOS						BODILY INJURY (Per accident)	$
	X HIRED AUTOS ONLY / X NON-OWNED AUTOS ONLY						PROPERTY DAMAGE (Per accident)	$
								$
A	X UMBRELLA LIAB X OCCUR			37SBARG7859	01/05/2020	01/05/2021	EACH OCCURRENCE	$4,000,000
	EXCESS LIAB CLAIMS-MADE						AGGREGATE	$4,000,000
	DED X RETENTION $10000							$
B	WORKERS COMPENSATION AND EMPLOYERS' LIABILITY			37WECCC3741	01/05/2020	01/05/2021	X PER STATUTE / OTH-ER	
	ANY PROPRIETOR/PARTNER/EXECUTIVE OFFICER/MEMBER EXCLUDED? Y / N: N (Mandatory in NH)	N / A					E.L. EACH ACCIDENT	$1,000,000
	If yes, describe under DESCRIPTION OF OPERATIONS below						E.L. DISEASE - EA EMPLOYEE	$1,000,000
							E.L. DISEASE - POLICY LIMIT	$1,000,000

DESCRIPTION OF OPERATIONS / LOCATIONS / VEHICLES (ACORD 101, Additional Remarks Schedule, may be attached if more space is required)

RE: Any City/County Project

City of Lincoln, Lancaster County, and Lincoln-Lancaster County Public Building Commission, are additional insureds as respects general liability and auto liability when required by written contract. Waiver of Subrogation applies in favor of City of Lincoln, Lancaster County, and Lincoln-Lancaster County Public Building Commission, in regards to workers compensation, as allowed by statute, and required by written contract. Umbrella is follow form.

CERTIFICATE HOLDER

City of Lincoln, Lancaster County & Lincoln-Lancaster County
Public Building Commission
555 S 10th St
Lincoln, NE 68508

CANCELLATION

SHOULD ANY OF THE ABOVE DESCRIBED POLICIES BE CANCELLED BEFORE THE EXPIRATION DATE THEREOF, NOTICE WILL BE DELIVERED IN ACCORDANCE WITH THE POLICY PROVISIONS.

AUTHORIZED REPRESENTATIVE

William R. Wilkerson IV

© 1988-2015 ACORD CORPORATION. All rights reserved.

SPECTRUM POLICY DECLARATIONS (Continued)

POLICY NUMBER: 37 SBA RG7859

LOSS PAYEE :	MORRILL & JANES BANK AND TRUST
FORM SS 12 12	10101 WOODLAND ROAD
	LENEXA, KS. 66220
PROPERTY:	BUSINESS PERSONAL PROPERTY
LENDER'S LOSS PAYABLE :	VAR TECHNOLOGY FINANCE
FORM SS 12 12	2330 INTERSTATE 30
	MESQUITE, TX. 75150
PROPERTY:	LEASED COMPUTER EQUIPMENT

Form Numbers of Forms and Endorsements that apply:

SS 00 01 03 14	SS 00 05 12 06	SS 00 07 07 05	SS 00 08 04 05
SS 00 61 07 19	SS 00 64 09 16	SS 84 95 09 07	SS 12 35 03 12
SS 41 70 06 11	SS 41 71 06 11	SS 01 06 04 19	SS 01 07 07 17
SS 01 15 12 17	SS 89 93 07 16	SS 00 60 09 15	SS 04 13 03 92
SS 04 19 07 05	SS 04 22 07 05	SS 04 30 07 05	SS 04 33 04 05
SS 04 39 07 05	SS 04 41 03 18	SS 04 42 03 17	SS 04 44 07 05
SS 04 45 07 05	SS 04 46 09 14	SS 04 47 04 09	SS 04 78 12 17
SS 04 80 03 00	SS 04 86 03 00	SS 40 18 07 05	SS 40 93 07 05
SS 41 12 12 17	SS 41 30 09 07	SS 41 51 10 09	SS 41 63 06 11
IH 10 01 09 86	SS 05 21 04 05	SS 05 47 09 15	SS 50 04 06 04
SS 50 19 01 15	SS 51 10 03 17	SS 51 11 03 17	SS 09 01 12 14
SS 09 07 12 14	SS 09 10 12 14	SS 09 12 12 14	SS 09 67 09 14
SS 09 70 12 14	SS 09 71 12 14	SS 10 18 04 01	SS 12 12 03 92
SS 12 15 03 00	SS 83 47 07 01	IH 99 40 04 09	IH 99 41 04 09
SX 80 01 06 97	SS 83 76 01 15	SS 12 23 06 11	

IH 12 00 11 85 ADDITIONAL INSURED
IH 12 00 11 85 ADDITIONAL INSURED/LANDLORD
IH 12 00 11 85 ADDITIONAL INSURED - DESIGNATED PERSON/ORG
IH 12 00 11 85 ADDITIONAL INSURED - OWNER, LESSEES OR CONTRACTOR-SCHEDULED PERSON OR ORGANIZATION
IH 12 00 11 85 ADDITIONAL INSURED-OWNERS, LESSEES OR CONTRACTORS -COMPLETED OPERATIONS

QUICK REFERENCE
BUSINESS LIABILITY COVERAGE FORM
READ YOUR POLICY CAREFULLY

BUSINESS LIABILITY COVERAGE FORM	Beginning on Page
A. COVERAGES	**1**
Business Liability	1
Medical Expenses	2
Coverage Extension - Supplementary Payments	2
B. EXCLUSIONS	**3**
C. WHO IS AN INSURED	**10**
D. LIABILITY AND MEDICAL EXPENSES LIMITS OF INSURANCE	**14**
E. LIABILITY AND MEDICAL EXPENSES GENERAL CONDITIONS	**15**
1. Bankruptcy	15
2. Duties In The Event Of Occurrence, Offense, Claim Or Suit	15
3. Financial Responsibility Laws	16
4. Legal Action Against Us	16
5. Separation Of Insureds	16
6. Representations	16
7. Other Insurance	16
8. Transfer Of Rights Of Recovery Against Others To Us	17
F. OPTIONAL ADDITIONAL INSURED COVERAGES	**18**
Additional Insureds	18
G. LIABILITY AND MEDICAL EXPENSES DEFINITIONS	**20**

BUSINESS LIABILITY COVERAGE FORM

Various provisions in this policy restrict coverage. Read the entire policy carefully to determine rights, duties and what is and is not covered.

Throughout this policy the words "you" and "your" refer to the Named Insured shown in the Declarations. The words "we", "us" and "our" refer to the stock insurance company member of The Hartford providing this insurance.

The word "insured" means any person or organization qualifying as such under Section **C.** - Who Is An Insured.

Other words and phrases that appear in quotation marks have special meaning. Refer to Section **G.** - Liability And Medical Expenses Definitions.

A. COVERAGES

1. BUSINESS LIABILITY COVERAGE (BODILY INJURY, PROPERTY DAMAGE, PERSONAL AND ADVERTISING INJURY)

Insuring Agreement

a. We will pay those sums that the insured becomes legally obligated to pay as damages because of "bodily injury", "property damage" or "personal and advertising injury" to which this insurance applies. We will have the right and duty to defend the insured against any "suit" seeking those damages. However, we will have no duty to defend the insured against any "suit" seeking damages for "bodily injury", "property damage" or "personal and advertising injury" to which this insurance does not apply.

We may, at our discretion, investigate any "occurrence" or offense and settle any claim or "suit" that may result. But:

(1) The amount we will pay for damages is limited as described in Section **D.** - Liability And Medical Expenses Limits Of Insurance; and

(2) Our right and duty to defend ends when we have used up the applicable limit of insurance in the payment of judgments, settlements or medical expenses to which this insurance applies.

No other obligation or liability to pay sums or perform acts or services is covered unless explicitly provided for under Coverage Extension - Supplementary Payments.

b. This insurance applies:

(1) To "bodily injury" and "property damage" only if:

(a) The "bodily injury" or "property damage" is caused by an "occurrence" that takes place in the "coverage territory";

(b) The "bodily injury" or "property damage" occurs during the policy period; and

(c) Prior to the policy period, no insured listed under Paragraph **1.** of Section **C.** – Who Is An Insured and no "employee" authorized by you to give or receive notice of an "occurrence" or claim, knew that the "bodily injury" or "property damage" had occurred, in whole or in part. If such a listed insured or authorized "employee" knew, prior to the policy period, that the "bodily injury" or "property damage" occurred, then any continuation, change or resumption of such "bodily injury" or "property damage" during or after the policy period will be deemed to have been known prior to the policy period.

(2) To "personal and advertising injury" caused by an offense arising out of your business, but only if the offense was committed in the "coverage territory" during the policy period.

c. "Bodily injury" or "property damage" will be deemed to have been known to have occurred at the earliest time when any insured listed under Paragraph **1.** of Section **C.** – Who Is An Insured or any "employee" authorized by you to give or receive notice of an "occurrence" or claim:

(1) Reports all, or any part, of the "bodily injury" or "property damage" to us or any other insurer;

© 2005, The Hartford

(2) Receives a written or verbal demand or claim for damages because of the "bodily injury" or "property damage"; or

(3) Becomes aware by any other means that "bodily injury" or "property damage" has occurred or has begun to occur.

d. Damages because of "bodily injury" include damages claimed by any person or organization for care, loss of services or death resulting at any time from the "bodily injury".

e. **Incidental Medical Malpractice**

(1) "Bodily injury" arising out of the rendering of or failure to render professional health care services as a physician, dentist, nurse, emergency medical technician or paramedic shall be deemed to be caused by an "occurrence", but only if:

(a) The physician, dentist, nurse, emergency medical technician or paramedic is employed by you to provide such services; and

(b) You are not engaged in the business or occupation of providing such services.

(2) For the purpose of determining the limits of insurance for incidental medical malpractice, any act or omission together with all related acts or omissions in the furnishing of these services to any one person will be considered one "occurrence".

2. **MEDICAL EXPENSES**

Insuring Agreement

a. We will pay medical expenses as described below for "bodily injury" caused by an accident:

(1) On premises you own or rent;

(2) On ways next to premises you own or rent; or

(3) Because of your operations;

provided that:

(1) The accident takes place in the "coverage territory" and during the policy period;

(2) The expenses are incurred and reported to us within three years of the date of the accident; and

(3) The injured person submits to examination, at our expense, by physicians of our choice as often as we reasonably require.

b. We will make these payments regardless of fault. These payments will not exceed the applicable limit of insurance. We will pay reasonable expenses for:

(1) First aid administered at the time of an accident;

(2) Necessary medical, surgical, x-ray and dental services, including prosthetic devices; and

(3) Necessary ambulance, hospital, professional nursing and funeral services.

3. **COVERAGE EXTENSION - SUPPLEMENTARY PAYMENTS**

a. We will pay, with respect to any claim or "suit" we investigate or settle, or any "suit" against an insured we defend:

(1) All expenses we incur.

(2) Up to $1,000 for the cost of bail bonds required because of accidents or traffic law violations arising out of the use of any vehicle to which Business Liability Coverage for "bodily injury" applies. We do not have to furnish these bonds.

(3) The cost of appeal bonds or bonds to release attachments, but only for bond amounts within the applicable limit of insurance. We do not have to furnish these bonds.

(4) All reasonable expenses incurred by the insured at our request to assist us in the investigation or defense of the claim or "suit", including actual loss of earnings up to $500 a day because of time off from work.

(5) All costs taxed against the insured in the "suit".

(6) Prejudgment interest awarded against the insured on that part of the judgment we pay. If we make an offer to pay the applicable limit of insurance, we will not pay any prejudgment interest based on that period of time after the offer.

(7) All interest on the full amount of any judgment that accrues after entry of the judgment and before we have paid, offered to pay, or deposited in court the part of the judgment that is within the applicable limit of insurance.

Any amounts paid under **(1)** through **(7)** above will not reduce the limits of insurance.

b. If we defend an insured against a "suit" and an indemnitee of the insured is also named as a party to the "suit", we will defend that indemnitee if all of the following conditions are met:

(1) The "suit" against the indemnitee seeks damages for which the insured has assumed the liability of the indemnitee in a contract or agreement that is an "insured contract";

(2) This insurance applies to such liability assumed by the insured;

(3) The obligation to defend, or the cost of the defense of, that indemnitee, has also been assumed by the insured in the same "insured contract";

(4) The allegations in the "suit" and the information we know about the "occurrence" are such that no conflict appears to exist between the interests of the insured and the interest of the indemnitee;

(5) The indemnitee and the insured ask us to conduct and control the defense of that indemnitee against such "suit" and agree that we can assign the same counsel to defend the insured and the indemnitee; and

(6) The indemnitee:

(a) Agrees in writing to:

(i) Cooperate with us in the investigation, settlement or defense of the "suit";

(ii) Immediately send us copies of any demands, notices, summonses or legal papers received in connection with the "suit";

(iii) Notify any other insurer whose coverage is available to the indemnitee; and

(iv) Cooperate with us with respect to coordinating other applicable insurance available to the indemnitee; and

(b) Provides us with written authorization to:

(i) Obtain records and other information related to the "suit"; and

(ii) Conduct and control the defense of the indemnitee in such "suit".

So long as the above conditions are met, attorneys' fees incurred by us in the defense of that indemnitee, necessary litigation expenses incurred by us and necessary litigation expenses incurred by the indemnitee at our request will be paid as Supplementary Payments.

Notwithstanding the provisions of Paragraph **1.b.(b)** of Section **B.** – Exclusions, such payments will not be deemed to be damages for "bodily injury" and "property damage" and will not reduce the Limits of Insurance.

Our obligation to defend an insured's indemnitee and to pay for attorneys' fees and necessary litigation expenses as Supplementary Payments ends when:

(1) We have used up the applicable limit of insurance in the payment of judgments or settlements; or

(2) The conditions set forth above, or the terms of the agreement described in Paragraph **(6)** above, are no longer met.

B. EXCLUSIONS

1. Applicable To Business Liability Coverage

This insurance does not apply to:

a. Expected Or Intended Injury

(1) "Bodily injury" or "property damage" expected or intended from the standpoint of the insured. This exclusion does not apply to "bodily injury" or "property damage" resulting from the use of reasonable force to protect persons or property; or

(2) "Personal and advertising injury" arising out of an offense committed by, at the direction of or with the consent or acquiescence of the insured with the expectation of inflicting "personal and advertising injury".

b. Contractual Liability

(1) "Bodily injury" or "property damage"; or

(2) "Personal and advertising injury"

for which the insured is obligated to pay damages by reason of the assumption of liability in a contract or agreement.

This exclusion does not apply to liability for damages because of:

(a) "Bodily injury", "property damage" or "personal and advertising injury" that the insured would have in the absence of the contract or agreement; or

(b) "Bodily injury" or "property damage" assumed in a contract or agreement that is an "insured contract", provided the "bodily injury" or "property damage" occurs subsequent to the execution of the contract or agreement. Solely for the purpose of liability assumed in an "insured contract", reasonable attorneys' fees and necessary litigation expenses incurred by or for a party other than an insured are deemed to be damages because of "bodily injury" or "property damage" provided:

(i) Liability to such party for, or for the cost of, that party's defense has also been assumed in the same "insured contract", and

(ii) Such attorneys' fees and litigation expenses are for defense of that party against a civil or alternative dispute resolution proceeding in which damages to which this insurance applies are alleged.

c. Liquor Liability

"Bodily injury" or "property damage" for which any insured may be held liable by reason of:

(1) Causing or contributing to the intoxication of any person;

(2) The furnishing of alcoholic beverages to a person under the legal drinking age or under the influence of alcohol; or

(3) Any statute, ordinance or regulation relating to the sale, gift, distribution or use of alcoholic beverages.

This exclusion applies only if you are in the business of manufacturing, distributing, selling, serving or furnishing alcoholic beverages.

d. Workers' Compensation And Similar Laws

Any obligation of the insured under a workers' compensation, disability benefits or unemployment compensation law or any similar law.

e. Employer's Liability

"Bodily injury" to:

(1) An "employee" of the insured arising out of and in the course of:

(a) Employment by the insured; or

(b) Performing duties related to the conduct of the insured's business, or

(2) The spouse, child, parent, brother or sister of that "employee" as a consequence of **(1)** above.

This exclusion applies:

(1) Whether the insured may be liable as an employer or in any other capacity; and

(2) To any obligation to share damages with or repay someone else who must pay damages because of the injury.

This exclusion does not apply to liability assumed by the insured under an "insured contract".

f. Pollution

(1) "Bodily injury", "property damage" or "personal and advertising injury" arising out of the actual, alleged or threatened discharge, dispersal, seepage, migration, release or escape of "pollutants":

(a) At or from any premises, site or location which is or was at any time owned or occupied by, or rented or loaned to any insured. However, this subparagraph does not apply to:

(i) "Bodily injury" if sustained within a building and caused by smoke, fumes, vapor or soot produced by or originating from equipment that is used to heat, cool or dehumidify the building, or equipment that is used to heat water for personal use, by the building's occupants or their guests;

(ii) "Bodily injury" or "property damage" for which you may be held liable, if you are a contractor and the owner or lessee of such premises, site or location has been added to your policy as an additional insured with respect to your ongoing operations performed for that additional insured at that premises, site or location and such premises, site or location is not and never was owned or occupied by, or rented or loaned to, any insured, other than that additional insured; or

(iii) "Bodily injury" or "property damage" arising out of heat, smoke or fumes from a "hostile fire";

(b) At or from any premises, site or location which is or was at any time used by or for any insured or others for the handling, storage, disposal, processing or treatment of waste;

(c) Which are or were at any time transported, handled, stored, treated, disposed of, or processed as waste by or for:

(i) Any insured; or

(ii) Any person or organization for whom you may be legally responsible;

(d) At or from any premises, site or location on which any insured or any contractors or subcontractors working directly or indirectly on any insured's behalf are performing operations if the "pollutants" are brought on or to the premises, site or location in connection with such operations by such insured, contractor or subcontractor. However, this subparagraph does not apply to:

(i) "Bodily injury" or "property damage" arising out of the escape of fuels, lubricants or other operating fluids which are needed to perform the normal electrical, hydraulic or mechanical functions necessary for the operation of "mobile equipment" or its parts, if such fuels, lubricants or other operating fluids escape from a vehicle part designed to hold, store or receive them. This exception does not apply if the "bodily injury" or "property damage" arises out of the intentional discharge, dispersal or release of the fuels, lubricants or other operating fluids, or if such fuels, lubricants or other operating fluids are brought on or to the premises, site or location with the intent that they be discharged, dispersed or released as part of the operations being performed by such insured, contractor or subcontractor;

(ii) "Bodily injury" or "property damage" sustained within a building and caused by the release of gases, fumes or vapors from materials brought into that building in connection with operations being performed by you or on your behalf by a contractor or subcontractor; or

(iii) "Bodily injury" or "property damage" arising out of heat, smoke or fumes from a "hostile fire"; or

(e) At or from any premises, site or location on which any insured or any contractors or subcontractors working directly or indirectly on any insured's behalf are performing operations if the operations are to test for, monitor, clean up, remove, contain, treat, detoxify or neutralize, or in any way respond to, or assess the effects of, "pollutants".

(2) Any loss, cost or expense arising out of any:

(a) Request, demand, order or statutory or regulatory requirement that any insured or others test for, monitor, clean up, remove, contain, treat, detoxify or neutralize, or in any way respond to, or assess the effects of, "pollutants"; or

(b) Claim or suit by or on behalf of a governmental authority for damages because of testing for, monitoring, cleaning up, removing, containing, treating, detoxifying or neutralizing, or in any way responding to, or assessing the effects of, "pollutants".

However, this paragraph does not apply to liability for damages because of "property damage" that the insured would have in the absence of such request, demand, order or statutory or regulatory requirement, or such claim or "suit" by or on behalf of a governmental authority.

g. Aircraft, Auto Or Watercraft

"Bodily injury" or "property damage" arising out of the ownership, maintenance, use or entrustment to others of any aircraft, "auto" or watercraft owned or operated by or rented or loaned to any insured. Use includes operation and "loading or unloading".

This exclusion applies even if the claims against any insured allege negligence or other wrongdoing in the supervision, hiring, employment, training or monitoring of others by that insured, if the "occurrence" which caused the "bodily injury" or "property damage" involved the ownership, maintenance, use or entrustment to others of any aircraft, "auto" or watercraft that is owned or operated by or rented or loaned to any insured.

This exclusion does not apply to:

(1) A watercraft while ashore on premises you own or rent;

(2) A watercraft you do not own that is:

(a) Less than 51 feet long; and

(b) Not being used to carry persons for a charge;

(3) Parking an "auto" on, or on the ways next to, premises you own or rent, provided the "auto" is not owned by or rented or loaned to you or the insured;

(4) Liability assumed under any "insured contract" for the ownership, maintenance or use of aircraft or watercraft;

(5) "Bodily injury" or "property damage" arising out of the operation of any of the equipment listed in Paragraph **f.(2)** or **f.(3)** of the definition of "mobile equipment"; or

(6) An aircraft that is not owned by any insured and is hired, chartered or loaned with a paid crew. However, this exception does not apply if the insured has any other insurance for such "bodily injury" or "property damage", whether the other insurance is primary, excess, contingent or on any other basis.

h. Mobile Equipment

"Bodily injury" or "property damage" arising out of:

(1) The transportation of "mobile equipment" by an "auto" owned or operated by or rented or loaned to any insured; or

(2) The use of "mobile equipment" in, or while in practice or preparation for, a prearranged racing, speed or demolition contest or in any stunting activity.

i. War

"Bodily injury", "property damage" or "personal and advertising injury", however caused, arising, directly or indirectly, out of:

(1) War, including undeclared or civil war;

(2) Warlike action by a military force, including action in hindering or defending against an actual or expected attack, by any government, sovereign or other authority using military personnel or other agents; or

(3) Insurrection, rebellion, revolution, usurped power, or action taken by governmental authority in hindering or defending against any of these.

j. Professional Services

"Bodily injury", "property damage" or "personal and advertising injury" arising out of the rendering of or failure to render any professional service. This includes but is not limited to:

(1) Legal, accounting or advertising services;

(2) Preparing, approving, or failing to prepare or approve maps, shop drawings, opinions, reports, surveys, field orders, change orders, designs or drawings and specifications;

(3) Supervisory, inspection, architectural or engineering activities;

(4) Medical, surgical, dental, x-ray or nursing services treatment, advice or instruction;

(5) Any health or therapeutic service treatment, advice or instruction;

(6) Any service, treatment, advice or instruction for the purpose of appearance or skin enhancement, hair removal or replacement or personal grooming;

(7) Optical or hearing aid services including the prescribing, preparation, fitting, demonstration or distribution of ophthalmic lenses and similar products or hearing aid devices;

(8) Optometry or optometric services including but not limited to examination of the eyes and the prescribing, preparation, fitting,demonstration or distribution of ophthalmic lenses and similar products;

(9) Any:

(a) Body piercing (not including ear piercing);

(b) Tattooing, including but not limited to the insertion of pigments into or under the skin; and

(c) Similar services;

(10) Services in the practice of pharmacy; and

(11) Computer consulting, design or programming services, including web site design.

Paragraphs **(4)** and **(5)** of this exclusion do not apply to the Incidental Medical Malpractice coverage afforded under Paragraph **1.e.** in Section **A.** - Coverages.

k. Damage To Property

"Property damage" to:

(1) Property you own, rent or occupy, including any costs or expenses incurred by you, or any other person, organization or entity, for repair, replacement, enhancement, restoration or maintenance of such property for any reason, including prevention of injury to a person or damage to another's property;

(2) Premises you sell, give away or abandon, if the "property damage" arises out of any part of those premises;

(3) Property loaned to you;

(4) Personal property in the care, custody or control of the insured;

(5) That particular part of real property on which you or any contractors or subcontractors working directly or indirectly on your behalf are performing operations, if the "property damage" arises out of those operations; or

(6) That particular part of any property that must be restored, repaired or replaced because "your work" was incorrectly performed on it.

Paragraphs **(1)**, **(3)** and **(4)** of this exclusion do not apply to "property damage" (other than damage by fire) to premises, including the contents of such premises, rented to you for a period of 7 or fewer consecutive days. A separate Limit of Insurance applies to Damage To Premises Rented To You as described in Section **D.** - Limits Of Insurance.

Paragraph **(2)** of this exclusion does not apply if the premises are "your work" and were never occupied, rented or held for rental by you.

Paragraphs **(3)** and **(4)** of this exclusion do not apply to the use of elevators.

Paragraphs **(3)**, **(4)**, **(5)** and **(6)** of this exclusion do not apply to liability assumed under a sidetrack agreement.

Paragraphs **(3)** and **(4)** of this exclusion do not apply to "property damage" to borrowed equipment while not being used to perform operations at a job site.

Paragraph **(6)** of this exclusion does not apply to "property damage" included in the "products-completed operations hazard".

l. Damage To Your Product

"Property damage" to "your product" arising out of it or any part of it.

m. Damage To Your Work

"Property damage" to "your work" arising out of it or any part of it and included in the "products-completed operations hazard".

This exclusion does not apply if the damaged work or the work out of which the damage arises was performed on your behalf by a subcontractor.

n. Damage To Impaired Property Or Property Not Physically Injured

"Property damage" to "impaired property" or property that has not been physically injured, arising out of:

(1) A defect, deficiency, inadequacy or dangerous condition in "your product" or "your work"; or

(2) A delay or failure by you or anyone acting on your behalf to perform a contract or agreement in accordance with its terms.

This exclusion does not apply to the loss of use of other property arising out of sudden and accidental physical injury to "your product" or "your work" after it has been put to its intended use.

o. Recall Of Products, Work Or Impaired Property

Damages claimed for any loss, cost or expense incurred by you or others for the loss of use, withdrawal, recall, inspection, repair, replacement, adjustment, removal or disposal of:

(1) "Your product";

(2) "Your work"; or

(3) "Impaired property";

if such product, work or property is withdrawn or recalled from the market or from use by any person or organization because of a known or suspected defect, deficiency, inadequacy or dangerous condition in it.

p. Personal And Advertising Injury

"Personal and advertising injury":

(1) Arising out of oral, written or electronic publication of material, if done by or at the direction of the insured with knowledge of its falsity;

(2) Arising out of oral, written or electronic publication of material whose first publication took place before the beginning of the policy period;

(3) Arising out of a criminal act committed by or at the direction of the insured;

(4) Arising out of any breach of contract, except an implied contract to use another's "advertising idea" in your "advertisement";

(5) Arising out of the failure of goods, products or services to conform with any statement of quality or performance made in your "advertisement";

(6) Arising out of the wrong description of the price of goods, products or services;

(7) Arising out of any violation of any intellectual property rights such as copyright, patent, trademark, trade name, trade secret, service mark or other designation of origin or authenticity.

However, this exclusion does not apply to infringement, in your "advertisement", of

(a) Copyright;

(b) Slogan, unless the slogan is also a trademark, trade name, service mark or other designation of origin or authenticity; or

(c) Title of any literary or artistic work;

(8) Arising out of an offense committed by an insured whose business is:

(a) Advertising, broadcasting, publishing or telecasting;

(b) Designing or determining content of web sites for others; or

(c) An Internet search, access, content or service provider.

However, this exclusion does not apply to Paragraphs **a.**, **b.** and **c.** under the definition of "personal and advertising injury" in Section **G.** – Liability And Medical Expenses Definitions.

For the purposes of this exclusion, placing an "advertisement" for or linking to others on your web site, by itself, is not considered the business of advertising, broadcasting, publishing or telecasting;

(9) Arising out of an electronic chat room or bulletin board the insured hosts, owns, or over which the insured exercises control;

(10) Arising out of the unauthorized use of another's name or product in your e-mail address, domain name or metatags, or any other similar tactics to mislead another's potential customers;

(11) Arising out of the violation of a person's right of privacy created by any state or federal act.

However, this exclusion does not apply to liability for damages that the insured would have in the absence of such state or federal act;

(12) Arising out of:

(a) An "advertisement" for others on your web site;

(b) Placing a link to a web site of others on your web site;

(c) Content from a web site of others displayed within a frame or border on your web site. Content includes information, code, sounds, text, graphics or images; or

(d) Computer code, software or programming used to enable:

(i) Your web site; or

(ii) The presentation or functionality of an "advertisement" or other content on your web site;

(13) Arising out of a violation of any anti-trust law;

(14) Arising out of the fluctuation in price or value of any stocks, bonds or other securities; or

(15) Arising out of discrimination or humiliation committed by or at the direction of any "executive officer", director, stockholder, partner or member of the insured.

q. Electronic Data

Damages arising out of the loss of, loss of use of, damage to, corruption of, inability to access, or inability to manipulate "electronic data".

r. Employment-Related Practices

"Bodily injury" or "personal and advertising injury" to:

(1) A person arising out of any:

(a) Refusal to employ that person;

(b) Termination of that person's employment; or

(c) Employment-related practices, policies, acts or omissions, such as coercion, demotion, evaluation, reassignment, discipline, defamation, harassment, humiliation or discrimination directed at that person; or

(2) The spouse, child, parent, brother or sister of that person as a consequence of "bodily injury" or "personal and advertising injury" to the person at whom any of the employment-related practices described in Paragraphs **(a)**, **(b)**, or **(c)** above is directed.

This exclusion applies:

(1) Whether the insured may be liable as an employer or in any other capacity; and

(2) To any obligation to share damages with or repay someone else who must pay damages because of the injury.

s. Asbestos

(1) "Bodily injury", "property damage" or "personal and advertising injury" arising out of the "asbestos hazard".

(2) Any damages, judgments, settlements, loss, costs or expenses that:

(a) May be awarded or incurred by reason of any claim or suit alleging actual or threatened injury or damage of any nature or kind to persons or property which would not have occurred in whole or in part but for the "asbestos hazard";

(b) Arise out of any request, demand, order or statutory or regulatory requirement that any insured or others test for, monitor, clean up, remove, encapsulate, contain, treat, detoxify or neutralize or in any way respond to or assess the effects of an "asbestos hazard"; or

(c) Arise out of any claim or suit for damages because of testing for, monitoring, cleaning up, removing, encapsulating, containing, treating, detoxifying or neutralizing or in any way responding to or assessing the effects of an "asbestos hazard".

t. Violation Of Statutes That Govern E-Mails, Fax, Phone Calls Or Other Methods Of Sending Material Or Information

"Bodily injury", "property damage", or "personal and advertising injury" arising directly or indirectly out of any action or omission that violates or is alleged to violate:

(1) The Telephone Consumer Protection Act (TCPA), including any amendment of or addition to such law;

(2) The CAN-SPAM Act of 2003, including any amendment of or addition to such law; or

(3) Any statute, ordinance or regulation, other than the TCPA or CAN-SPAM Act of 2003, that prohibits or limits the sending, transmitting, communicating or distribution of material or information.

Damage To Premises Rented To You – Exception For Damage By Fire, Lightning or Explosion

Exclusions **c.** through **h.** and **k.** through **o.** do not apply to damage by fire, lightning or explosion to premises rented to you or temporarily occupied by you with permission of the owner. A separate Limit of Insurance applies to this coverage as described in Section **D.** - Liability And Medical Expenses Limits Of Insurance.

2. **Applicable To Medical Expenses Coverage**

   We will not pay expenses for "bodily injury":

   a. **Any Insured**
      To any insured, except "volunteer workers".

   b. **Hired Person**

      To a person hired to do work for or on behalf of any insured or a tenant of any insured.

   c. **Injury On Normally Occupied Premises**

      To a person injured on that part of premises you own or rent that the person normally occupies.

   d. **Workers' Compensation And Similar Laws**

      To a person, whether or not an "employee" of any insured, if benefits for the "bodily injury" are payable or must be provided under a workers' compensation or disability benefits law or a similar law.

   e. **Athletics Activities**

      To a person injured while practicing, instructing or participating in any physical exercises or games, sports or athletic contests.

   f. **Products-Completed Operations Hazard**

      Included with the "products-completed operations hazard".

   g. **Business Liability Exclusions**

      Excluded under Business Liability Coverage.

C. WHO IS AN INSURED

1. If you are designated in the Declarations as:

   a. An individual, you and your spouse are insureds, but only with respect to the conduct of a business of which you are the sole owner.

   b. A partnership or joint venture, you are an insured. Your members, your partners, and their spouses are also insureds, but only with respect to the conduct of your business.

   c. A limited liability company, you are an insured. Your members are also insureds, but only with respect to the conduct of your business. Your managers are insureds, but only with respect to their duties as your managers.

   d. An organization other than a partnership, joint venture or limited liability company, you are an insured. Your "executive officers" and directors are insureds, but only with respect to their duties as your officers or directors. Your stockholders are also insureds, but only with respect to their liability as stockholders.

   e. A trust, you are an insured. Your trustees are also insureds, but only with respect to their duties as trustees.

2. Each of the following is also an insured:

   a. **Employees And Volunteer Workers**

      Your "volunteer workers" only while performing duties related to the conduct of your business, or your "employees", other than either your "executive officers" (if you are an organization other than a partnership, joint venture or limited liability company) or your managers (if you are a limited liability company), but only for acts within the scope of their employment by you or while performing duties related to the conduct of your business.

      However, none of these "employees" or "volunteer workers" are insureds for:

      (1) "Bodily injury" or "personal and advertising injury":

      (a) To you, to your partners or members (if you are a partnership or joint venture), to your members (if you are a limited liability company), or to a co-"employee" while in the course of his or her employment or performing duties related to the conduct of your business, or to your other "volunteer workers" while performing duties related to the conduct of your business;

      (b) To the spouse, child, parent, brother or sister of that co-"employee" or that "volunteer worker" as a consequence of Paragraph **(1)(a)** above;

      (c) For which there is any obligation to share damages with or repay someone else who must pay damages because of the injury described in Paragraphs **(1)(a)** or **(b)** above; or

      (d) Arising out of his or her providing or failing to provide professional health care services.

      If you are not in the business of providing professional health care services, Paragraph **(d)** does not apply to any nurse, emergency medical technician or paramedic employed by you to provide such services.

      (2) "Property damage" to property:

      (a) Owned, occupied or used by,

(b) Rented to, in the care, custody or control of, or over which physical control is being exercised for any purpose by you, any of your "employees", "volunteer workers", any partner or member (if you are a partnership or joint venture), or any member (if you are a limited liability company).

b. **Real Estate Manager**

Any person (other than your "employee" or "volunteer worker"), or any organization while acting as your real estate manager.

c. **Temporary Custodians Of Your Property**

Any person or organization having proper temporary custody of your property if you die, but only:

(1) With respect to liability arising out of the maintenance or use of that property; and

(2) Until your legal representative has been appointed.

d. **Legal Representative If You Die**

Your legal representative if you die, but only with respect to duties as such. That representative will have all your rights and duties under this insurance.

e. **Unnamed Subsidiary**

Any subsidiary and subsidiary thereof, of yours which is a legally incorporated entity of which you own a financial interest of more than 50% of the voting stock on the effective date of this Coverage Part.

The insurance afforded herein for any subsidiary not shown in the Declarations as a named insured does not apply to injury or damage with respect to which an insured under this insurance is also an insured under another policy or would be an insured under such policy but for its termination or upon the exhaustion of its limits of insurance.

3. **Newly Acquired Or Formed Organization**

Any organization you newly acquire or form, other than a partnership, joint venture or limited liability company, and over which you maintain financial interest of more than 50% of the voting stock, will qualify as a Named Insured if there is no other similar insurance available to that organization. However:

a. Coverage under this provision is afforded only until the 180th day after you acquire or form the organization or the end of the policy period, whichever is earlier; and

b. Coverage under this provision does not apply to:

(1) "Bodily injury" or "property damage" that occurred; or

(2) "Personal and advertising injury" arising out of an offense committed

before you acquired or formed the organization.

4. **Operator Of Mobile Equipment**

With respect to "mobile equipment" registered in your name under any motor vehicle registration law, any person is an insured while driving such equipment along a public highway with your permission. Any other person or organization responsible for the conduct of such person is also an insured, but only with respect to liability arising out of the operation of the equipment, and only if no other insurance of any kind is available to that person or organization for this liability. However, no person or organization is an insured with respect to:

a. "Bodily injury" to a co-"employee" of the person driving the equipment; or

b. "Property damage" to property owned by, rented to, in the charge of or occupied by you or the employer of any person who is an insured under this provision.

5. **Operator of Nonowned Watercraft**

With respect to watercraft you do not own that is less than 51 feet long and is not being used to carry persons for a charge, any person is an insured while operating such watercraft with your permission. Any other person or organization responsible for the conduct of such person is also an insured, but only with respect to liability arising out of the operation of the watercraft, and only if no other insurance of any kind is available to that person or organization for this liability.

However, no person or organization is an insured with respect to:

a. "Bodily injury" to a co-"employee" of the person operating the watercraft; or

b. "Property damage" to property owned by, rented to, in the charge of or occupied by you or the employer of any person who is an insured under this provision.

6. **Additional Insureds When Required By Written Contract, Written Agreement Or Permit**

The person(s) or organization(s) identified in Paragraphs **a.** through **f.** below are additional insureds when you have agreed, in a written

contract, written agreement or because of a permit issued by a state or political subdivision, that such person or organization be added as an additional insured on your policy, provided the injury or damage occurs subsequent to the execution of the contract or agreement, or the issuance of the permit.

A person or organization is an additional insured under this provision only for that period of time required by the contract, agreement or permit.

However, no such person or organization is an additional insured under this provision if such person or organization is included as an additional insured by an endorsement issued by us and made a part of this Coverage Part, including all persons or organizations added as additional insureds under the specific additional insured coverage grants in Section **F.** – Optional Additional Insured Coverages.

a. Vendors

Any person(s) or organization(s) (referred to below as vendor), but only with respect to "bodily injury" or "property damage" arising out of "your products" which are distributed or sold in the regular course of the vendor's business and only if this Coverage Part provides coverage for "bodily injury" or "property damage" included within the "products-completed operations hazard".

(1) The insurance afforded to the vendor is subject to the following additional exclusions:

This insurance does not apply to:

(a) "Bodily injury" or "property damage" for which the vendor is obligated to pay damages by reason of the assumption of liability in a contract or agreement. This exclusion does not apply to liability for damages that the vendor would have in the absence of the contract or agreement;

(b) Any express warranty unauthorized by you;

(c) Any physical or chemical change in the product made intentionally by the vendor;

(d) Repackaging, except when unpacked solely for the purpose of inspection, demonstration, testing, or the substitution of parts under instructions from the manufacturer, and then repackaged in the original container;

(e) Any failure to make such inspections, adjustments, tests or servicing as the vendor has agreed to make or normally undertakes to make in the usual course of business, in connection with the distribution or sale of the products;

(f) Demonstration, installation, servicing or repair operations, except such operations performed at the vendor's premises in connection with the sale of the product;

(g) Products which, after distribution or sale by you, have been labeled or relabeled or used as a container, part or ingredient of any other thing or substance by or for the vendor; or

(h) "Bodily injury" or "property damage" arising out of the sole negligence of the vendor for its own acts or omissions or those of its employees or anyone else acting on its behalf. However, this exclusion does not apply to:

(i) The exceptions contained in Subparagraphs **(d)** or **(f)**; or

(ii) Such inspections, adjustments, tests or servicing as the vendor has agreed to make or normally undertakes to make in the usual course of business, in connection with the distribution or sale of the products.

(2) This insurance does not apply to any insured person or organization from whom you have acquired such products, or any ingredient, part or container, entering into, accompanying or containing such products.

b. Lessors Of Equipment

(1) Any person or organization from whom you lease equipment; but only with respect to their liability for "bodily injury", "property damage" or "personal and advertising injury" caused, in whole or in part, by your maintenance, operation or use of equipment leased to you by such person or organization.

(2) With respect to the insurance afforded to these additional insureds, this insurance does not apply to any "occurrence" which takes place after you cease to lease that equipment.

c. Lessors Of Land Or Premises

(1) Any person or organization from whom you lease land or premises, but only with respect to liability arising out of the ownership, maintenance or use of that part of the land or premises leased to you.

(2) With respect to the insurance afforded to these additional insureds, this insurance does not apply to:

(a) Any "occurrence" which takes place after you cease to lease that land or be a tenant in that premises; or

(b) Structural alterations, new construction or demolition operations performed by or on behalf of such person or organization.

d. Architects, Engineers Or Surveyors

(1) Any architect, engineer, or surveyor, but only with respect to liability for "bodily injury", "property damage" or "personal and advertising injury" caused, in whole or in part, by your acts or omissions or the acts or omissions of those acting on your behalf:

(a) In connection with your premises; or

(b) In the performance of your ongoing operations performed by you or on your behalf.

(2) With respect to the insurance afforded to these additional insureds, the following additional exclusion applies:

This insurance does not apply to "bodily injury", "property damage" or "personal and advertising injury" arising out of the rendering of or the failure to render any professional services by or for you, including:

(a) The preparing, approving, or failure to prepare or approve, maps, shop drawings, opinions, reports, surveys, field orders, change orders, designs or drawings and specifications; or

(b) Supervisory, inspection, architectural or engineering activities.

e. Permits Issued By State Or Political Subdivisions

(1) Any state or political subdivision, but only with respect to operations performed by you or on your behalf for which the state or political subdivision has issued a permit.

(2) With respect to the insurance afforded to these additional insureds, this insurance does not apply to:

(a) "Bodily injury", "property damage" or "personal and advertising injury" arising out of operations performed for the state or municipality; or

(b) "Bodily injury" or "property damage" included within the "products-completed operations hazard".

f. Any Other Party

(1) Any other person or organization who is not an insured under Paragraphs **a.** through **e.** above, but only with respect to liability for "bodily injury", "property damage" or "personal and advertising injury" caused, in whole or in part, by your acts or omissions or the acts or omissions of those acting on your behalf:

(a) In the performance of your ongoing operations;

(b) In connection with your premises owned by or rented to you; or

(c) In connection with "your work" and included within the "products-completed operations hazard", but only if

(i) The written contract or written agreement requires you to provide such coverage to such additional insured; and

(ii) This Coverage Part provides coverage for "bodily injury" or "property damage" included within the "products-completed operations hazard".

(2) With respect to the insurance afforded to these additional insureds, this insurance does not apply to:

"Bodily injury", "property damage" or "personal and advertising injury" arising out of the rendering of, or the failure to render, any professional architectural, engineering or surveying services, including:

(a) The preparing, approving, or failure to prepare or approve, maps, shop drawings, opinions, reports, surveys, field orders, change orders, designs or drawings and specifications; or

(b) Supervisory, inspection, architectural or engineering activities.

The limits of insurance that apply to additional insureds are described in Section **D.** – Limits Of Insurance.

How this insurance applies when other insurance is available to an additional insured is described in the Other Insurance Condition in Section **E.** – Liability And Medical Expenses General Conditions.

No person or organization is an insured with respect to the conduct of any current or past partnership, joint venture or limited liability company that is not shown as a Named Insured in the Declarations.

D. LIABILITY AND MEDICAL EXPENSES LIMITS OF INSURANCE

1. The Most We Will Pay

The Limits of Insurance shown in the Declarations and the rules below fix the most we will pay regardless of the number of:

a. Insureds;

b. Claims made or "suits" brought; or

c. Persons or organizations making claims or bringing "suits".

2. Aggregate Limits

The most we will pay for:

a. Damages because of "bodily injury" and "property damage" included in the "products-completed operations hazard" is the Products-Completed Operations Aggregate Limit shown in the Declarations.

b. Damages because of all other "bodily injury", "property damage" or "personal and advertising injury", including medical expenses, is the General Aggregate Limit shown in the Declarations.

This General Aggregate Limit applies separately to each of your "locations" owned by or rented to you.

"Location" means premises involving the same or connecting lots, or premises whose connection is interrupted only by a street, roadway or right-of-way of a railroad.

This General Aggregate limit does not apply to "property damage" to premises while rented to you or temporarily occupied by you with permission of the owner, arising out of fire, lightning or explosion.

3. Each Occurrence Limit

Subject to **2.a.** or **2.b** above, whichever applies, the most we will pay for the sum of all damages because of all "bodily injury", "property damage" and medical expenses arising out of any one "occurrence" is the Liability and Medical Expenses Limit shown in the Declarations.

The most we will pay for all medical expenses because of "bodily injury" sustained by any one person is the Medical Expenses Limit shown in the Declarations.

4. Personal And Advertising Injury Limit

Subject to **2.b.** above, the most we will pay for the sum of all damages because of all "personal and advertising injury" sustained by any one person or organization is the Personal and Advertising Injury Limit shown in the Declarations.

5. Damage To Premises Rented To You Limit

The Damage To Premises Rented To You Limit is the most we will pay under Business Liability Coverage for damages because of "property damage" to any one premises, while rented to you, or in the case of damage by fire, lightning or explosion, while rented to you or temporarily occupied by you with permission of the owner.

In the case of damage by fire, lightning or explosion, the Damage to Premises Rented To You Limit applies to all damage proximately caused by the same event, whether such damage results from fire, lightning or explosion or any combination of these.

6. How Limits Apply To Additional Insureds

The most we will pay on behalf of a person or organization who is an additional insured under this Coverage Part is the lesser of:

a. The limits of insurance specified in a written contract, written agreement or permit issued by a state or political subdivision; or

b. The Limits of Insurance shown in the Declarations.

Such amount shall be a part of and not in addition to the Limits of Insurance shown in the Declarations and described in this Section.

If more than one limit of insurance under this policy and any endorsements attached thereto applies to any claim or "suit", the most we will pay under this policy and the endorsements is the single highest limit of liability of all coverages applicable to such claim or "suit". However, this paragraph does not apply to the Medical Expenses limit set forth in Paragraph **3.** above.

The Limits of Insurance of this Coverage Part apply separately to each consecutive annual period and to any remaining period of less than 12 months, starting with the beginning of the policy period shown in the Declarations, unless the policy period is extended after issuance for an additional period of less than 12 months. In that case, the additional period will be deemed part of the last preceding period for purposes of determining the Limits of Insurance.

E. LIABILITY AND MEDICAL EXPENSES GENERAL CONDITIONS

1. Bankruptcy

Bankruptcy or insolvency of the insured or of the insured's estate will not relieve us of our obligations under this Coverage Part.

2. Duties In The Event Of Occurrence, Offense, Claim Or Suit

a. Notice Of Occurrence Or Offense

You or any additional insured must see to it that we are notified as soon as practicable of an "occurrence" or an offense which may result in a claim. To the extent possible, notice should include:

(1) How, when and where the "occurrence" or offense took place;

(2) The names and addresses of any injured persons and witnesses; and

(3) The nature and location of any injury or damage arising out of the "occurrence" or offense.

b. Notice Of Claim

If a claim is made or "suit" is brought against any insured, you or any additional insured must:

(1) Immediately record the specifics of the claim or "suit" and the date received; and

(2) Notify us as soon as practicable.

You or any additional insured must see to it that we receive a written notice of the claim or "suit" as soon as practicable.

c. Assistance And Cooperation Of The Insured

You and any other involved insured must:

(1) Immediately send us copies of any demands, notices, summonses or legal papers received in connection with the claim or "suit";

(2) Authorize us to obtain records and other information;

(3) Cooperate with us in the investigation, settlement of the claim or defense against the "suit"; and

(4) Assist us, upon our request, in the enforcement of any right against any person or organization that may be liable to the insured because of injury or damage to which this insurance may also apply.

d. Obligations At The Insured's Own Cost

No insured will, except at that insured's own cost, voluntarily make a payment, assume any obligation, or incur any expense, other than for first aid, without our consent.

e. Additional Insured's Other Insurance

If we cover a claim or "suit" under this Coverage Part that may also be covered by other insurance available to an additional insured, such additional insured must submit such claim or "suit" to the other insurer for defense and indemnity.

However, this provision does not apply to the extent that you have agreed in a written contract, written agreement or permit that this insurance is primary and non-contributory with the additional insured's own insurance.

f. Knowledge Of An Occurrence, Offense, Claim Or Suit

Paragraphs **a.** and **b.** apply to you or to any additional insured only when such "occurrence", offense, claim or "suit" is known to:

(1) You or any additional insured that is an individual;

(2) Any partner, if you or an additional insured is a partnership;

(3) Any manager, if you or an additional insured is a limited liability company;

(4) Any "executive officer" or insurance manager, if you or an additional insured is a corporation;

(5) Any trustee, if you or an additional insured is a trust; or

(6) Any elected or appointed official, if you or an additional insured is a political subdivision or public entity.

This Paragraph **f.** applies separately to you and any additional insured.

3. **Financial Responsibility Laws**

   a. When this policy is certified as proof of financial responsibility for the future under the provisions of any motor vehicle financial responsibility law, the insurance provided by the policy for "bodily injury" liability and "property damage" liability will comply with the provisions of the law to the extent of the coverage and limits of insurance required by that law.

   b. With respect to "mobile equipment" to which this insurance applies, we will provide any liability, uninsured motorists, underinsured motorists, no-fault or other coverage required by any motor vehicle law. We will provide the required limits for those coverages.

4. **Legal Action Against Us**

   No person or organization has a right under this Coverage Form:

   a. To join us as a party or otherwise bring us into a "suit" asking for damages from an insured; or

   b. To sue us on this Coverage Form unless all of its terms have been fully complied with.

   A person or organization may sue us to recover on an agreed settlement or on a final judgment against an insured; but we will not be liable for damages that are not payable under the terms of this insurance or that are in excess of the applicable limit of insurance. An agreed settlement means a settlement and release of liability signed by us, the insured and the claimant or the claimant's legal representative.

5. **Separation Of Insureds**

   Except with respect to the Limits of Insurance, and any rights or duties specifically assigned in this policy to the first Named Insured, this insurance applies:

   a. As if each Named Insured were the only Named Insured; and

   b. Separately to each insured against whom a claim is made or "suit" is brought.

6. **Representations**

   a. **When You Accept This Policy**

      By accepting this policy, you agree:

      (1) The statements in the Declarations are accurate and complete;

      (2) Those statements are based upon representations you made to us; and

      (3) We have issued this policy in reliance upon your representations.

   b. **Unintentional Failure To Disclose Hazards**

      If unintentionally you should fail to disclose all hazards relating to the conduct of your business at the inception date of this Coverage Part, we shall not deny any coverage under this Coverage Part because of such failure.

7. **Other Insurance**

   If other valid and collectible insurance is available for a loss we cover under this Coverage Part, our obligations are limited as follows:

   a. **Primary Insurance**

      This insurance is primary except when **b.** below applies. If other insurance is also primary, we will share with all that other insurance by the method described in **c.** below.

   b. **Excess Insurance**

      This insurance is excess over any of the other insurance, whether primary, excess, contingent or on any other basis:

      (1) **Your Work**

      That is Fire, Extended Coverage, Builder's Risk, Installation Risk or similar coverage for "your work";

      (2) **Premises Rented To You**

      That is fire, lightning or explosion insurance for premises rented to you or temporarily occupied by you with permission of the owner;

      (3) **Tenant Liability**

      That is insurance purchased by you to cover your liability as a tenant for "property damage" to premises rented to you or temporarily occupied by you with permission of the owner;

      (4) **Aircraft, Auto Or Watercraft**

      If the loss arises out of the maintenance or use of aircraft, "autos" or watercraft to the extent not subject to Exclusion **g.** of Section **A.** – Coverages.

      (5) **Property Damage To Borrowed Equipment Or Use Of Elevators**

      If the loss arises out of "property damage" to borrowed equipment or the use of elevators to the extent not subject to Exclusion **k.** of Section **A.** – Coverages.

(6) When You Are Added As An Additional Insured To Other Insurance

That is other insurance available to you covering liability for damages arising out of the premises or operations, or products and completed operations, for which you have been added as an additional insured by that insurance; or

(7) When You Add Others As An Additional Insured To This Insurance

That is other insurance available to an additional insured.

However, the following provisions apply to other insurance available to any person or organization who is an additional insured under this Coverage Part:

(a) Primary Insurance When Required By Contract

This insurance is primary if you have agreed in a written contract, written agreement or permit that this insurance be primary. If other insurance is also primary, we will share with all that other insurance by the method described in **c.** below.

(b) Primary And Non-Contributory To Other Insurance When Required By Contract

If you have agreed in a written contract, written agreement or permit that this insurance is primary and non-contributory with the additional insured's own insurance, this insurance is primary and we will not seek contribution from that other insurance.

Paragraphs **(a)** and **(b)** do not apply to other insurance to which the additional insured has been added as an additional insured.

When this insurance is excess, we will have no duty under this Coverage Part to defend the insured against any "suit" if any other insurer has a duty to defend the insured against that "suit". If no other insurer defends, we will undertake to do so, but we will be entitled to the insured's rights against all those other insurers.

When this insurance is excess over other insurance, we will pay only our share of the amount of the loss, if any, that exceeds the sum of:

(1) The total amount that all such other insurance would pay for the loss in the absence of this insurance; and

(2) The total of all deductible and self-insured amounts under all that other insurance.

We will share the remaining loss, if any, with any other insurance that is not described in this Excess Insurance provision and was not bought specifically to apply in excess of the Limits of Insurance shown in the Declarations of this Coverage Part.

c. Method Of Sharing

If all the other insurance permits contribution by equal shares, we will follow this method also. Under this approach, each insurer contributes equal amounts until it has paid its applicable limit of insurance or none of the loss remains, whichever comes first.

If any of the other insurance does not permit contribution by equal shares, we will contribute by limits. Under this method, each insurer's share is based on the ratio of its applicable limit of insurance to the total applicable limits of insurance of all insurers.

8. Transfer Of Rights Of Recovery Against Others To Us

a. Transfer Of Rights Of Recovery

If the insured has rights to recover all or part of any payment, including Supplementary Payments, we have made under this Coverage Part, those rights are transferred to us. The insured must do nothing after loss to impair them. At our request, the insured will bring "suit" or transfer those rights to us and help us enforce them. This condition does not apply to Medical Expenses Coverage.

b. Waiver Of Rights Of Recovery (Waiver Of Subrogation)

If the insured has waived any rights of recovery against any person or organization for all or part of any payment, including Supplementary Payments, we have made under this Coverage Part, we also waive that right, provided the insured waived their rights of recovery against such person or organization in a contract, agreement or permit that was executed prior to the injury or damage.

F. OPTIONAL ADDITIONAL INSURED COVERAGES

If listed or shown as applicable in the Declarations, one or more of the following Optional Additional Insured Coverages also apply. When any of these Optional Additional Insured Coverages apply, Paragraph **6.** (Additional Insureds When Required by Written Contract, Written Agreement or Permit) of Section **C.**, Who Is An Insured, does not apply to the person or organization shown in the Declarations. These coverages are subject to the terms and conditions applicable to Business Liability Coverage in this policy, except as provided below:

1. **Additional Insured - Designated Person Or Organization**

   WHO IS AN INSURED under Section **C.** is amended to include as an additional insured the person(s) or organization(s) shown in the Declarations, but only with respect to liability for "bodily injury", "property damage" or "personal and advertising injury" caused, in whole or in part, by your acts or omissions or the acts or omissions of those acting on your behalf:

   a. In the performance of your ongoing operations; or

   b. In connection with your premises owned by or rented to you.

2. **Additional Insured - Managers Or Lessors Of Premises**

   a. WHO IS AN INSURED under Section **C.** is amended to include as an additional insured the person(s) or organization(s) shown in the Declarations as an Additional Insured - Designated Person Or Organization; but only with respect to liability arising out of the ownership, maintenance or use of that part of the premises leased to you and shown in the Declarations.

   b. With respect to the insurance afforded to these additional insureds, the following additional exclusions apply:

   This insurance does not apply to:

   (1) Any "occurrence" which takes place after you cease to be a tenant in that premises; or

   (2) Structural alterations, new construction or demolition operations performed by or on behalf of such person or organization.

3. **Additional Insured - Grantor Of Franchise**

   WHO IS AN INSURED under Section **C.** is amended to include as an additional insured the person(s) or organization(s) shown in the Declarations as an Additional Insured - Grantor Of Franchise, but only with respect to their liability as grantor of franchise to you.

4. **Additional Insured - Lessor Of Leased Equipment**

   a. WHO IS AN INSURED under Section **C.** is amended to include as an additional insured the person(s) or organization(s) shown in the Declarations as an Additional Insured – Lessor of Leased Equipment, but only with respect to liability for "bodily injury", "property damage" or "personal and advertising injury" caused, in whole or in part, by your maintenance, operation or use of equipment leased to you by such person(s) or organization(s).

   b. With respect to the insurance afforded to these additional insureds, this insurance does not apply to any "occurrence" which takes place after you cease to lease that equipment.

5. **Additional Insured - Owners Or Other Interests From Whom Land Has Been Leased**

   a. WHO IS AN INSURED under Section **C.** is amended to include as an additional insured the person(s) or organization(s) shown in the Declarations as an Additional Insured – Owners Or Other Interests From Whom Land Has Been Leased, but only with respect to liability arising out of the ownership, maintenance or use of that part of the land leased to you and shown in the Declarations.

   b. With respect to the insurance afforded to these additional insureds, the following additional exclusions apply:

   This insurance does not apply to:

   (1) Any "occurrence" that takes place after you cease to lease that land; or

   (2) Structural alterations, new construction or demolition operations performed by or on behalf of such person or organization.

6. **Additional Insured - State Or Political Subdivision – Permits**

   a. WHO IS AN INSURED under Section **C.** is amended to include as an additional insured the state or political subdivision shown in the Declarations as an Additional

Insured – State Or Political Subdivision - Permits, but only with respect to operations performed by you or on your behalf for which the state or political subdivision has issued a permit.

b. With respect to the insurance afforded to these additional insureds, the following additional exclusions apply:

This insurance does not apply to:

(1) "Bodily injury", "property damage" or "personal and advertising injury" arising out of operations performed for the state or municipality; or

(2) "Bodily injury" or "property damage" included in the "product-completed operations" hazard.

7. Additional Insured – Vendors

a. WHO IS AN INSURED under Section **C.** is amended to include as an additional insured the person(s) or organization(s) (referred to below as vendor) shown in the Declarations as an Additional Insured - Vendor, but only with respect to "bodily injury" or "property damage" arising out of "your products" which are distributed or sold in the regular course of the vendor's business and only if this Coverage Part provides coverage for "bodily injury" or "property damage" included within the "products-completed operations hazard".

b. The insurance afforded to the vendor is subject to the following additional exclusions:

(1) This insurance does not apply to:

(a) "Bodily injury" or "property damage" for which the vendor is obligated to pay damages by reason of the assumption of liability in a contract or agreement. This exclusion does not apply to liability for damages that the vendor would have in the absence of the contract or agreement;

(b) Any express warranty unauthorized by you;

(c) Any physical or chemical change in the product made intentionally by the vendor;

(d) Repackaging, unless unpacked solely for the purpose of inspection, demonstration, testing, or the substitution of parts under instructions from the manufacturer, and then repackaged in the original container;

(e) Any failure to make such inspections, adjustments, tests or servicing as the vendor has agreed to make or normally undertakes to make in the usual course of business, in connection with the distribution or sale of the products;

(f) Demonstration, installation, servicing or repair operations, except such operations performed at the vendor's premises in connection with the sale of the product;

(g) Products which, after distribution or sale by you, have been labeled or relabeled or used as a container, part or ingredient of any other thing or substance by or for the vendor; or

(h) "Bodily injury" or "property damage" arising out of the sole negligence of the vendor for its own acts or omissions or those of its employees or anyone else acting on its behalf. However, this exclusion does not apply to:

(i) The exceptions contained in Subparagraphs **(d)** or **(f)**; or

(ii) Such inspections, adjustments, tests or servicing as the vendor has agreed to make or normally undertakes to make in the usual course of business, in connection with the distribution or sale of the products.

(2) This insurance does not apply to any insured person or organization from whom you have acquired such products, or any ingredient, part or container, entering into, accompanying or containing such products.

8. Additional Insured – Controlling Interest

WHO IS AN INSURED under Section **C.** is amended to include as an additional insured the person(s) or organization(s) shown in the Declarations as an Additional Insured – Controlling Interest, but only with respect to their liability arising out of:

a. Their financial control of you; or

b. Premises they own, maintain or control while you lease or occupy these premises.

This insurance does not apply to structural alterations, new construction and demolition operations performed by or for that person or organization.

9. **Additional Insured – Owners, Lessees Or Contractors – Scheduled Person Or Organization**

   a. WHO IS AN INSURED under Section **C.** is amended to include as an additional insured the person(s) or organization(s) shown in the Declarations as an Additional Insured – Owner, Lessees Or Contractors, but only with respect to liability for "bodily injury", "property damage" or "personal and advertising injury" caused, in whole or in part, by your acts or omissions or the acts or omissions of those acting on your behalf:

      (1) In the performance of your ongoing operations for the additional insured(s); or

      (2) In connection with "your work" performed for that additional insured and included within the "products-completed operations hazard", but only if this Coverage Part provides coverage for "bodily injury" or "property damage" included within the "products-completed operations hazard".

   b. With respect to the insurance afforded to these additional insureds, this insurance does not apply to "bodily injury", "property damage" or "personal an advertising injury" arising out of the rendering of, or the failure to render, any professional architectural, engineering or surveying services, including:

      (1) The preparing, approving, or failure to prepare or approve, maps, shop drawings, opinions, reports, surveys, field orders, change orders, designs or drawings and specifications; or

      (2) Supervisory, inspection, architectural or engineering activities.

10. **Additional Insured – Co-Owner Of Insured Premises**

    WHO IS AN INSURED under Section **C.** is amended to include as an additional insured the person(s) or Organization(s) shown in the Declarations as an Additional Insured – Co-Owner Of Insured Premises, but only with respect to their liability as co-owner of the premises shown in the Declarations.

The limits of insurance that apply to additional insureds are described in Section **D.** – Limits Of Insurance.

How this insurance applies when other insurance is available to an additional insured is described in the Other Insurance Condition in Section **E.** – Liability And Medical Expenses General Conditions.

G. LIABILITY AND MEDICAL EXPENSES DEFINITIONS

1. "Advertisement" means the widespread public dissemination of information or images that has the purpose of inducing the sale of goods, products or services through:

   a. **(1)** Radio;
      (2) Television;
      (3) Billboard;
      (4) Magazine;
      (5) Newspaper;

   b. The Internet, but only that part of a web site that is about goods, products or services for the purposes of inducing the sale of goods, products or services; or

   c. Any other publication that is given widespread public distribution.

   However, "advertisement" does not include:

   a. The design, printed material, information or images contained in, on or upon the packaging or labeling of any goods or products; or

   b. An interactive conversation between or among persons through a computer network.

2. "Advertising idea" means any idea for an "advertisement".

3. "Asbestos hazard" means an exposure or threat of exposure to the actual or alleged properties of asbestos and includes the mere presence of asbestos in any form.

4. "Auto" means a land motor vehicle, trailer or semi-trailer designed for travel on public roads, including any attached machinery or equipment. But "auto" does not include "mobile equipment".

5. "Bodily injury" means physical:

   a. Injury;

   b. Sickness; or

   c. Disease

   sustained by a person and, if arising out of the above, mental anguish or death at any time.

6. "Coverage territory" means:

a. The United States of America (including its territories and possessions), Puerto Rico and Canada;

b. International waters or airspace, but only if the injury or damage occurs in the course of travel or transportation between any places included in **a.** above;

c. All other parts of the world if the injury or damage arises out of:

(1) Goods or products made or sold by you in the territory described in **a.** above;

(2) The activities of a person whose home is in the territory described in **a.** above, but is away for a short time on your business; or

(3) "Personal and advertising injury" offenses that take place through the Internet or similar electronic means of communication

provided the insured's responsibility to pay damages is determined in the United States of America (including its territories and possessions), Puerto Rico or Canada, in a "suit" on the merits according to the substantive law in such territory, or in a settlement we agree to.

7. "Electronic data" means information, facts or programs:

a. Stored as or on;

b. Created or used on; or

c. Transmitted to or from

computer software, including systems and applications software, hard or floppy disks, CD-ROMS, tapes, drives, cells, data processing devices or any other media which are used with electronically controlled equipment.

8. "Employee" includes a "leased worker". "Employee" does not include a "temporary worker".

9. "Executive officer" means a person holding any of the officer positions created by your charter, constitution, by-laws or any other similar governing document.

10. "Hostile fire" means one which becomes uncontrollable or breaks out from where it was intended to be.

11. "Impaired property" means tangible property, other than "your product" or "your work", that cannot be used or is less useful because:

a. It incorporates "your product" or "your work" that is known or thought to be defective, deficient, inadequate or dangerous; or

b. You have failed to fulfill the terms of a contract or agreement;

if such property can be restored to use by:

a. The repair, replacement, adjustment or removal of "your product" or "your work"; or

b. Your fulfilling the terms of the contract or agreement.

12. "Insured contract" means:

a. A contract for a lease of premises. However, that portion of the contract for a lease of premises that indemnifies any person or organization for damage by fire, lightning or explosion to premises while rented to you or temporarily occupied by you with permission of the owner is subject to the Damage To Premises Rented To You limit described in Section **D.** – Liability and Medical Expenses Limits of Insurance.

b. A sidetrack agreement;

c. Any easement or license agreement, including an easement or license agreement in connection with construction or demolition operations on or within 50 feet of a railroad;

d. Any obligation, as required by ordinance, to indemnify a municipality, except in connection with work for a municipality;

e. An elevator maintenance agreement; or

f. That part of any other contract or agreement pertaining to your business (including an indemnification of a municipality in connection with work performed for a municipality) under which you assume the tort liability of another party to pay for "bodily injury" or "property damage" to a third person or organization, provided the "bodily injury" or "property damage" is caused, in whole or in part, by you or by those acting on your behalf. Tort liability means a liability that would be imposed by law in the absence of any contract or agreement.

Paragraph **f.** includes that part of any contract or agreement that indemnifies a railroad for "bodily injury" or "property damage" arising out of construction or demolition operations within 50 feet of any railroad property and affecting any railroad bridge or trestle, tracks, road-beds, tunnel, underpass or crossing.

However, Paragraph **f.** does not include that part of any contract or agreement:

(1) That indemnifies an architect, engineer or surveyor for injury or damage arising out of:

(a) Preparing, approving or failing to prepare or approve maps, shop drawings, opinions, reports, surveys, field orders, change orders, designs or drawings and specifications; or

(b) Giving directions or instructions, or failing to give them, if that is the primary cause of the injury or damage; or

(2) Under which the insured, if an architect, engineer or surveyor, assumes liability for an injury or damage arising out of the insured's rendering or failure to render professional services, including those listed in **(1)** above and supervisory, inspection, architectural or engineering activities.

13. "Leased worker" means a person leased to you by a labor leasing firm under an agreement between you and the labor leasing firm, to perform duties related to the conduct of your business. "Leased worker" does not include a "temporary worker".

14. "Loading or unloading" means the handling of property:

a. After it is moved from the place where it is accepted for movement into or onto an aircraft, watercraft or "auto";

b. While it is in or on an aircraft, watercraft or "auto"; or

c. While it is being moved from an aircraft, watercraft or "auto" to the place where it is finally delivered;

but "loading or unloading" does not include the movement of property by means of a mechanical device, other than a hand truck, that is not attached to the aircraft, watercraft or "auto".

15. "Mobile equipment" means any of the following types of land vehicles, including any attached machinery or equipment:

a. Bulldozers, farm machinery, forklifts and other vehicles designed for use principally off public roads;

b. Vehicles maintained for use solely on or next to premises you own or rent;

c. Vehicles that travel on crawler treads;

d. Vehicles, whether self-propelled or not, on which are permanently mounted:

(1) Power cranes, shovels, loaders, diggers or drills; or

(2) Road construction or resurfacing equipment such as graders, scrapers or rollers;

e. Vehicles not described in **a.**, **b.**, **c.**, or **d.** above that are not self-propelled and are maintained primarily to provide mobility to permanently attached equipment of the following types:

(1) Air compressors, pumps and generators, including spraying, welding, building cleaning, geophysical exploration, lighting and well servicing equipment; or

(2) Cherry pickers and similar devices used to raise or lower workers;

f. Vehicles not described in **a.**, **b.**, **c.**, or **d.** above maintained primarily for purposes other than the transportation of persons or cargo.

However, self-propelled vehicles with the following types of permanently attached equipment are not "mobile equipment" but will be considered "autos":

(1) Equipment, of at least 1,000 pounds gross vehicle weight, designed primarily for:

(a) Snow removal;

(b) Road maintenance, but not construction or resurfacing; or

(c) Street cleaning;

(2) Cherry pickers and similar devices mounted on automobile or truck chassis and used to raise or lower workers; and

(3) Air compressors, pumps and generators, including spraying, welding, building cleaning, geophysical exploration, lighting and well servicing equipment.

16. "Occurrence" means an accident, including continuous or repeated exposure to substantially the same general harmful conditions.

17. "Personal and advertising injury" means injury, including consequential "bodily injury", arising out of one or more of the following offenses:

a. False arrest, detention or imprisonment;

b. Malicious prosecution;

c. The wrongful eviction from, wrongful entry into, or invasion of the right of private occupancy of a room, dwelling or premises that the person occupies, committed by or on behalf of its owner, landlord or lessor;

d. Oral, written or electronic publication of material that slanders or libels a person or organization or disparages a person's or organization's goods, products or services;

e. Oral, written or electronic publication of material that violates a person's right of privacy;

f. Copying, in your "advertisement", a person's or organization's "advertising idea" or style of "advertisement";

g. Infringement of copyright, slogan, or title of any literary or artistic work, in your "advertisement"; or

h. Discrimination or humiliation that results in injury to the feelings or reputation of a natural person.

18. "Pollutants" means any solid, liquid, gaseous or thermal irritant or contaminant, including smoke, vapor, soot, fumes, acids, alkalis, chemicals and waste. Waste includes materials to be recycled, reconditioned or reclaimed.

19. "Products-completed operations hazard";

a. Includes all "bodily injury" and "property damage" occurring away from premises you own or rent and arising out of "your product" or "your work" except:

(1) Products that are still in your physical possession; or

(2) Work that has not yet been completed or abandoned. However, "your work" will be deemed to be completed at the earliest of the following times:

(a) When all of the work called for in your contract has been completed.

(b) When all of the work to be done at the job site has been completed if your contract calls for work at more than one job site.

(c) When that part of the work done at a job site has been put to its intended use by any person or organization other than another contractor or subcontractor working on the same project.

Work that may need service, maintenance, correction, repair or replacement, but which is otherwise complete, will be treated as completed.

The "bodily injury" or "property damage" must occur away from premises you own or rent, unless your business includes the selling, handling or distribution of "your product" for consumption on premises you own or rent.

b. Does not include "bodily injury" or "property damage" arising out of:

(1) The transportation of property, unless the injury or damage arises out of a condition in or on a vehicle not owned or operated by you, and that condition was created by the "loading or unloading" of that vehicle by any insured; or

(2) The existence of tools, uninstalled equipment or abandoned or unused materials.

20. "Property damage" means:

a. Physical injury to tangible property, including all resulting loss of use of that property. All such loss of use shall be deemed to occur at the time of the physical injury that caused it; or

b. Loss of use of tangible property that is not physically injured. All such loss of use shall be deemed to occur at the time of "occurrence" that caused it.

As used in this definition, "electronic data" is not tangible property.

21. "Suit" means a civil proceeding in which damages because of "bodily injury", "property damage" or "personal and advertising injury" to which this insurance applies are alleged. "Suit" includes:

a. An arbitration proceeding in which such damages are claimed and to which the insured must submit or does submit with our consent; or

b. Any other alternative dispute resolution proceeding in which such damages are claimed and to which the insured submits with our consent.

22. "Temporary worker" means a person who is furnished to you to substitute for a permanent "employee" on leave or to meet seasonal or short-term workload conditions.

23. "Volunteer worker" means a person who:

a. Is not your "employee";

b. Donates his or her work;

c. Acts at the direction of and within the scope of duties determined by you; and

d. Is not paid a fee, salary or other compensation by you or anyone else for their work performed for you.

24. "Your product":

a. Means:

(1) Any goods or products, other than real property, manufactured, sold, handled, distributed or disposed of by:

(a) You;

(b) Others trading under your name; or

(c) A person or organization whose business or assets you have acquired; and

(2) Containers (other than vehicles), materials, parts or equipment furnished in connection with such goods or products.

b. Includes:

(1) Warranties or representations made at any time with respect to the fitness, quality, durability, performance or use of "your product"; and

(2) The providing of or failure to provide warnings or instructions.

c. Does not include vending machines or other property rented to or located for the use of others but not sold.

25. "Your work":

a. Means:

(1) Work or operations performed by you or on your behalf; and

(2) Materials, parts or equipment furnished in connection with such work or operations.

b. Includes:

(1) Warranties or representations made at any time with respect to the fitness, quality, durability, performance or use of "your work"; and

(2) The providing of or failure to provide warnings or instructions.

COMMERCIAL AUTOMOBILE COVERAGE PART - DECLARATIONS BUSINESS AUTO COVERAGE FORM

THE HARTFORD

POLICY NUMBER: 37 UEC VT6194

This COMMERCIAL AUTOMOBILE COVERAGE PART consists of:

A. This Declarations Form;
B. Business Auto Coverage Form; and
C. Any Endorsements issued to be a part of this Coverage Form and listed below.

ITEM ONE - NAMED INSURED AND ADDRESS

The Named Insured is stated on the Common Policy Declarations.

ADVANCE PREMIUM: $ 4,940.00

AUDIT PERIOD:

Except in this Declarations, when we use the word "Declarations" in this Coverage Part, we mean this "Declarations" or the "Common Policy Declarations".

Form Numbers of Coverage Forms, Endorsements and Schedules that are part of this Coverage Part:

HA00040302	HA00120615T	CA00011013	HA21020614	CA99031013
CA21041013	CA31040218	CA01650716	CA01661013	CA02190116
CA05020416	CA20481013	CA23441116	HA99080614	HA99160312
IH12011185				

© 2015, The Hartford
(Includes copyrighted material of Insurance Services Office, Inc., with its permission.)

THIS ENDORSEMENT CHANGES THE POLICY. PLEASE READ IT CAREFULLY.

COMMERCIAL AUTOMOBILE BROAD FORM ENDORSEMENT

This endorsement modifies insurance provided under the following:

BUSINESS AUTO COVERAGE FORM

To the extent that the provisions of this endorsement provide broader benefits to the "insured" than other provisions of the Coverage Form, the provisions of this endorsement apply.

1. BROAD FORM INSURED

A. Subsidiaries and Newly Acquired or Formed Organizations

The Named Insured shown in the Declarations is amended to include:

(1) Any legal business entity other than a partnership or joint venture, formed as a subsidiary in which you have an ownership interest of more than 50% on the effective date of the Coverage Form. However, the Named Insured does not include any subsidiary that is an "insured" under any other automobile policy or would be an "insured" under such a policy but for its termination or the exhaustion of its Limit of Insurance.

(2) Any organization that is acquired or formed by you and over which you maintain majority ownership. However, the Named Insured does not include any newly formed or acquired organization:

(a) That is a partnership or joint venture,

(b) That is an "insured" under any other policy,

(c) That has exhausted its Limit of Insurance under any other policy, or

(d) 180 days or more after its acquisition or formation by you, unless you have given us notice of the acquisition or formation.

Coverage does not apply to "bodily injury" or "property damage" that results from an "accident" that occurred before you formed or acquired the organization.

B. Employees as Insureds

Paragraph A.1. - WHO IS AN INSURED - of SECTION II - LIABILITY COVERAGE is amended to add:

d. Any "employee" of yours while using a covered "auto" you don't own, hire or borrow in your business or your personal affairs.

C. Lessors as Insureds

Paragraph A.1. - WHO IS AN INSURED - of Section II - Liability Coverage is amended to add:

e. The lessor of a covered "auto" while the "auto" is leased to you under a written agreement if:

(1) The agreement requires you to provide direct primary insurance for the lessor and

(2) The "auto" is leased without a driver.

Such a leased "auto" will be considered a covered "auto" you own and not a covered "auto" you hire.

D. Additional Insured if Required by Contract

(1) Paragraph A.1. - WHO IS AN INSURED - of Section II - Liability Coverage is amended to add:

f. When you have agreed, in a written contract or written agreement, that a person or organization be added as an additional insured on your business auto policy, such person or organization is an "insured", but only to the extent such person or organization is liable for "bodily injury" or "property damage" caused by the conduct of an "insured" under paragraphs a. or b. of Who Is An Insured with regard to the ownership, maintenance or use of a covered "auto."

© 2011, The Hartford (Includes copyrighted material of ISO Properties, Inc., with its permission.)

The insurance afforded to any such additional insured applies only if the "bodily injury" or "property damage" occurs:

(1) During the policy period, and

(2) Subsequent to the execution of such written contract, and

(3) Prior to the expiration of the period of time that the written contract requires such insurance be provided to the additional insured.

(2) How Limits Apply

If you have agreed in a written contract or written agreement that another person or organization be added as an additional insured on your policy, the most we will pay on behalf of such additional insured is the lesser of:

(a) The limits of insurance specified in the written contract or written agreement; or

(b) The Limits of Insurance shown in the Declarations.

Such amount shall be a part of and not in addition to Limits of Insurance shown in the Declarations and described in this Section.

(3) Additional Insureds Other Insurance

If we cover a claim or "suit" under this Coverage Part that may also be covered by other insurance available to an additional insured, such additional insured must submit such claim or "suit" to the other insurer for defense and indemnity.

However, this provision does not apply to the extent that you have agreed in a written contract or written agreement that this insurance is primary and non-contributory with the additional insured's own insurance.

(4) Duties in The Event Of Accident, Claim, Suit or Loss

If you have agreed in a written contract or written agreement that another person or organization be added as an additional insured on your policy, the additional insured shall be required to comply with the provisions in LOSS CONDITIONS 2. - DUTIES IN THE EVENT OF ACCIDENT, CLAIM , SUIT OR LOSS – OF SECTION IV – BUSINESS AUTO CONDITIONS, in the same manner as the Named Insured.

E. Primary and Non-Contributory if Required by Contract

Only with respect to insurance provided to an additional insured in 1.D. - Additional Insured If Required by Contract, the following provisions apply:

(3) Primary Insurance When Required By Contract

This insurance is primary if you have agreed in a written contract or written agreement that this insurance be primary. If other insurance is also primary, we will share with all that other insurance by the method described in Other Insurance 5.d.

(4) Primary And Non-Contributory To Other Insurance When Required By Contract

If you have agreed in a written contract or written agreement that this insurance is primary and non-contributory with the additional insured's own insurance, this insurance is primary and we will not seek contribution from that other insurance.

Paragraphs **(3)** and **(4)** do not apply to other insurance to which the additional insured has been added as an additional insured.

When this insurance is excess, we will have no duty to defend the insured against any "suit" if any other insurer has a duty to defend the insured against that "suit". If no other insurer defends, we will undertake to do so, but we will be entitled to the insured's rights against all those other insurers.

When this insurance is excess over other insurance, we will pay only our share of the amount of the loss, if any, that exceeds the sum of:

(1) The total amount that all such other insurance would pay for the loss in the absence of this insurance; and

(2) The total of all deductible and self-insured amounts under all that other insurance.

We will share the remaining loss, if any, by the method described in Other Insurance 5.d.

2. AUTOS RENTED BY EMPLOYEES

Any "auto" hired or rented by your "employee" on your behalf and at your direction will be considered an "auto" you hire.

The OTHER INSURANCE Condition is amended by adding the following:

© 2011, The Hartford (Includes copyrighted material of ISO Properties, Inc., with its permission.)

If an "employee's" personal insurance also applies on an excess basis to a covered "auto" hired or rented by your "employee" on your behalf and at your direction, this insurance will be primary to the "employee's" personal insurance.

3. **AMENDED FELLOW EMPLOYEE EXCLUSION**

EXCLUSION 5. - FELLOW EMPLOYEE - of SECTION II - LIABILITY COVERAGE does not apply if you have workers' compensation insurance in-force covering all of your "employees".

Coverage is excess over any other collectible insurance.

4. **HIRED AUTO PHYSICAL DAMAGE COVERAGE**

If hired "autos" are covered "autos" for Liability Coverage and if Comprehensive, Specified Causes of Loss, or Collision coverages are provided under this Coverage Form for any "auto" you own, then the Physical Damage Coverages provided are extended to "autos" you hire or borrow, subject to the following limit.

The most we will pay for "loss" to any hired "auto" is:

(1) $100,000;

(2) The actual cash value of the damaged or stolen property at the time of the "loss"; or

(3) The cost of repairing or replacing the damaged or stolen property,

whichever is smallest, minus a deductible. The deductible will be equal to the largest deductible applicable to any owned "auto" for that coverage. No deductible applies to "loss" caused by fire or lightning. Hired Auto Physical Damage coverage is excess over any other collectible insurance. Subject to the above limit, deductible and excess provisions, we will provide coverage equal to the broadest coverage applicable to any covered "auto" you own.

We will also cover loss of use of the hired "auto" if it results from an "accident", you are legally liable and the lessor incurs an actual financial loss, subject to a maximum of $1000 per "accident".

This extension of coverage does not apply to any "auto" you hire or borrow from any of your "employees", partners (if you are a partnership), members (if you are a limited liability company), or members of their households.

5. **PHYSICAL DAMAGE - ADDITIONAL TEMPORARY TRANSPORTATION EXPENSE COVERAGE**

Paragraph A.4.a. of SECTION III - PHYSICAL DAMAGE COVERAGE is amended to provide a limit of $50 per day and a maximum limit of $1,000.

6. **LOAN/LEASE GAP COVERAGE**

Under SECTION III - PHYSICAL DAMAGE COVERAGE, in the event of a total "loss" to a covered "auto", we will pay your additional legal obligation for any difference between the actual cash value of the "auto" at the time of the "loss" and the "outstanding balance" of the loan/lease.

"Outstanding balance" means the amount you owe on the loan/lease at the time of "loss" less any amounts representing taxes; overdue payments; penalties, interest or charges resulting from overdue payments; additional mileage charges; excess wear and tear charges; lease termination fees; security deposits not returned by the lessor; costs for extended warranties, credit life Insurance, health, accident or disability insurance purchased with the loan or lease; and carry-over balances from previous loans or leases.

7. **AIRBAG COVERAGE**

Under Paragraph B. EXCLUSIONS - of SECTION III - PHYSICAL DAMAGE COVERAGE, the following is added:

The exclusion relating to mechanical breakdown does not apply to the accidental discharge of an airbag.

8. **ELECTRONIC EQUIPMENT - BROADENED COVERAGE**

a. The exceptions to Paragraphs B.4 - EXCLUSIONS - of SECTION III - PHYSICAL DAMAGE COVERAGE are replaced by the following:

Exclusions **4.c.** and **4.d.** do not apply to equipment designed to be operated solely by use of the power from the "auto's" electrical system that, at the time of "loss", is:

(1) Permanently installed in or upon the covered "auto";

(2) Removable from a housing unit which is permanently installed in or upon the covered "auto";

(3) An integral part of the same unit housing any electronic equipment described in Paragraphs (1) and (2) above; or

© 2011, The Hartford (Includes copyrighted material of ISO Properties, Inc., with its permission.)

(4) Necessary for the normal operation of the covered "auto" or the monitoring of the covered "auto's" operating system.

b. Section III – Version CA 00 01 03 10 of the Business Auto Coverage Form, Physical Damage Coverage, Limit of Insurance, Paragraph C.2 and Version CA 00 01 10 01 of the Business Auto Coverage Form, Physical Damage Coverage, Limit of Insurance, Paragraph C are each amended to add the following:

$1,500 is the most we will pay for "loss" in any one "accident" to all electronic equipment (other than equipment designed solely for the reproduction of sound, and accessories used with such equipment) that reproduces, receives or transmits audio, visual or data signals which, at the time of "loss", is:

(1) Permanently installed in or upon the covered "auto" in a housing, opening or other location that is not normally used by the "auto" manufacturer for the installation of such equipment;

(2) Removable from a permanently installed housing unit as described in Paragraph 2.a. above or is an integral part of that equipment; or

(3) An integral part of such equipment.

c. For each covered "auto", should loss be limited to electronic equipment only, our obligation to pay for, repair, return or replace damaged or stolen electronic equipment will be reduced by the applicable deductible shown in the Declarations, or $250, whichever deductible is less.

9. EXTRA EXPENSE - BROADENED COVERAGE

Under Paragraph A. - COVERAGE - of SECTION III - PHYSICAL DAMAGE COVERAGE, we will pay for the expense of returning a stolen covered "auto" to you.

10. GLASS REPAIR - WAIVER OF DEDUCTIBLE

Under Paragraph D. - DEDUCTIBLE - of SECTION III - PHYSICAL DAMAGE COVERAGE, the following is added:

No deductible applies to glass damage if the glass is repaired rather than replaced.

11. TWO OR MORE DEDUCTIBLES

Under Paragraph D. - DEDUCTIBLE - of SECTION III - PHYSICAL DAMAGE COVERAGE, the following is added:

If another Hartford Financial Services Group, Inc. company policy or coverage form that is not an automobile policy or coverage form applies to the same "accident", the following applies:

(1) If the deductible under this Business Auto Coverage Form is the smaller (or smallest) deductible, it will be waived;

(2) If the deductible under this Business Auto Coverage Form is not the smaller (or smallest) deductible, it will be reduced by the amount of the smaller (or smallest) deductible.

12. AMENDED DUTIES IN THE EVENT OF ACCIDENT, CLAIM, SUIT OR LOSS

The requirement in LOSS CONDITIONS 2.a. - DUTIES IN THE EVENT OF ACCIDENT,CLAIM, SUIT OR LOSS - of SECTION IV - BUSINESS AUTO CONDITIONS that you must notify us of an "accident" applies only when the "accident" is known to:

(1) You, if you are an individual;

(2) A partner, if you are a partnership;

(3) A member, if you are a limited liability company; or

(4) An executive officer or insurance manager, if you are a corporation.

13. UNINTENTIONAL FAILURE TO DISCLOSE HAZARDS

If you unintentionally fail to disclose any hazards existing at the inception date of your policy, we will not deny coverage under this Coverage Form because of such failure.

14. HIRED AUTO - COVERAGE TERRITORY

Paragraph e. of GENERAL CONDITIONS 7. - POLICY PERIOD, COVERAGE TERRITORY - of SECTION IV - BUSINESS AUTO CONDITIONS is replaced by the following:

e. For short-term hired "autos", the coverage territory with respect to Liability Coverage is anywhere in the world provided that if the "insured's" responsibility to pay damages for "bodily injury" or "property damage" is determined in a "suit," the "suit" is brought in the United States of America, the territories and possessions of the United States of America, Puerto Rico or Canada or in a settlement we agree to.

15. WAIVER OF SUBROGATION

TRANSFER OF RIGHTS OF RECOVERY AGAINST OTHERS TO US - of SECTION IV - BUSINESS AUTO CONDITIONS is amended by adding the following:

© 2011, The Hartford (Includes copyrighted material of ISO Properties, Inc., with its permission.)

We waive any right of recovery we may have against any person or organization with whom you have a written contract that requires such waiver because of payments we make for damages under this Coverage Form.

16. RESULTANT MENTAL ANGUISH COVERAGE

The definition of "bodily injury" in SECTION V-DEFINITIONS is replaced by the following:

"Bodily injury" means bodily injury, sickness or disease sustained by any person, including mental anguish or death resulting from any of these.

17. EXTENDED CANCELLATION CONDITION

Paragraph 2. of the COMMON POLICY CONDITIONS - CANCELLATION - applies except as follows:

If we cancel for any reason other than nonpayment of premium, we will mail or deliver to the first Named Insured written notice of cancellation at least 60 days before the effective date of cancellation.

18. HYBRID, ELECTRIC, OR NATURAL GAS VEHICLE PAYMENT COVERAGE

In the event of a total loss to a "non-hybrid" auto for which Comprehensive, Specified Causes of Loss, or Collision coverages are provided under this Coverage Form, then such Physical Damage Coverages are amended as follows:

a. If the auto is replaced with a "hybrid" auto or an auto powered solely by electricity or natural gas, we will pay an additional 10%, to a maximum of $2,500, of the "non-hybrid" auto's actual cash value or replacement cost, whichever is less,

b. The auto must be replaced and a copy of a bill of sale or new lease agreement received by us within 60 calendar days of the date of "loss,"

c. Regardless of the number of autos deemed a total loss, the most we will pay under this Hybrid, Electric, or Natural Gas Vehicle Payment Coverage provision for any one "loss" is $10,000.

For the purposes of the coverage provision,

a. A "non-hybrid" auto is defined as an auto that uses only an internal combustion engine to move the auto but does not include autos powered solely by electricity or natural gas.

b. A "hybrid" auto is defined as an auto with an internal combustion engine and one or more electric motors; and that uses the internal combustion engine and one or more electric motors to move the auto, or the internal combustion engine to charge one or more electric motors, which move the auto.

19. VEHICLE WRAP COVERAGE

In the event of a total loss to an "auto" for which Comprehensive, Specified Causes of Loss, or Collision coverages are provided under this Coverage Form, then such Physical Damage Coverages are amended to add the following:

In addition to the actual cash value of the "auto", we will pay up to $1,000 for vinyl vehicle wraps which are displayed on the covered "auto" at the time of total loss. Regardless of the number of autos deemed a total loss, the most we will pay under this Vehicle Wrap Coverage provision for any one "loss" is $5,000. For purposes of this coverage provision, signs or other graphics painted or magnetically affixed to the vehicle are not considered vehicle wraps.

© 2011, The Hartford (Includes copyrighted material of ISO Properties, Inc., with its permission.)

THIS ENDORSEMENT CHANGES THE POLICY. PLEASE READ IT CAREFULLY.

WAIVER OF OUR RIGHT TO RECOVER FROM OTHERS ENDORSEMENT

Policy Number: 37 WEC CC3741 **Endorsement Number:**
Effective Date: 01/05/20 Effective hour is the same as stated on the Information Page of the policy.
Named Insured and Address: ENCOMPAS CORPORATION
1512 GRAND BLVD
KANSAS CITY MO 64108

We have the right to recover our payments from anyone liable for an injury covered by this policy. We will not enforce our right against the person or organization named in the Schedule.

This agreement shall not operate directly or indirectly to benefit anyone not named in the Schedule.

SCHEDULE

Any person or organization from whom you are required by contract or agreement to obtain this waiver from us. Endorsement is not applicable in KY, NH, NJ or for any MO construction risk

Countersigned by _____
Authorized Representative